ROCKWALL, TEXAS

"THE NEW HORIZON"

F.M. 3549 16" WATERLINE RELOCATION PROJECT

FM 3549

CIP-WT2016-001

SUBMITTAL DATE: MARCH 22, 2017

"I CERTIFY THAT THESE ENGINEERING DOCUMENTS ARE COMPLETE, ACCURATE AND ADEQUATE FOR THE INTENDED PURPOSES, INCLUDING CONSTRUCTION, BUT ARE NOT AUTHORIZED FOR CONSTRUCTION PRIOR TO FORMAL CITY APPROVAL."

STATE OF TEXAS
FRANCISCO C. GUERRERO
85464
LICENSED
PROFESSIONAL ENGINEER

FRANCISCO C. GUERRERO, P.E. — DATE: 1/03/2018

MAYOR

JIM PRUITT

CITY COUNCIL

DAVID WHITE
JOHN HOHENSHELT
KEVIN FOWLER
DENNIS LEWIS
SCOTT MILDER
MIKE TOWNSEND (MAYOR PRO-TEM)

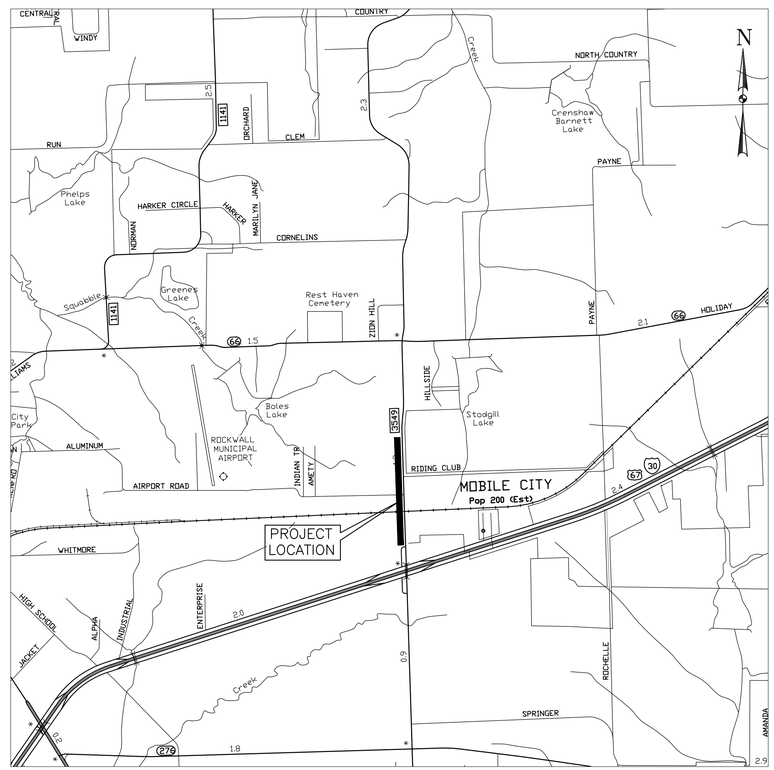

LOCATION MAP

SCALE =1"=2000'

SHEET INDEX

CONTRACTOR:
TRI-CON SERVICES, INC.
972-475-5207
INSPECTOR:
JAMES RICE, CITY OF ROCKWALL

ATKINS

18383 PRESTON RD., SUITE 500
DALLAS, TEXAS 75252 - (972) 818-7275
TBPE REG. NO. F-474

RECORD DRAWING

THESE RECORD DRAWINGS WERE PREPARED BY THE ENGINEER BASED UPON AS-CONSTRUCTED DRAWINGS PROVIDED BY THE CONSTRUCTION CONTRACTOR, WHO REPRESENTED THAT ALL FIELD CHANGES AND OTHER DEVIATIONS FROM THE APPROVED CONSTRUCTION DRAWINGS WERE INCLUDED.

REV.	CITY REVISION DESCRIPTION	AFFECTED SHEETS REV (R), ADD (A), VOID (V)	REV. BY	REV. DATE	APPROVED BY THE CITY

GENERAL NOTES

GENERAL

1. ALL WORK SHALL BE DONE IN ACCORDANCE WITH THE STANDARD SPECIFICATIONS OF THE CITY OF ROCKWALL, WHICH ADOPTED THE STANDARD SPECIFICATIONS FOR PUBLIC WORKS CONSTRUCTION, 4RD EDITION, NORTH CENTRAL TEXAS, (COG), WITH CITY AMENDMENTS. COPIES MAY BE OBTAINED FROM THE "NORTH CENTRAL TEXAS COUNCIL OF GOVERNMENTS",616 SIX FLAGS DR., P.O. BOX 5888, ARLINGTON, TEXAS 76005–5888. PH (817) 640–3300.

2. THESE PLANS, PREPARED BY ATKINS, DO NOT EXTEND TO OR INCLUDE DESIGNS OR SYSTEMS PERTAINING TO THE SAFETY OF THE CONSTRUCTION CONTRACTOR OR ITS EMPLOYEES, AGENTS, OR REPRESENTATIVES IN THE PERFORMANCE OF THE WORK. THE SEAL(S) OF ATKINS REGISTERED PROFESSIONAL ENGINEER(S) HEREON DOES NOT EXTEND TO ANY SUCH SAFETY SYSTEMS THAT MAY NOW OR HEREAFTER BE INCORPORATED IN THE WORK. THE CONSTRUCTION CONTRACTOR IS TO PREPARE OR OBTAIN THE APPROPRIATE SAFETY SYSTEMS, INCLUDING THE PLANS AND SPECIFICATIONS.

3. THE CONTRACTOR SHALL ABIDE BY ALL APPLICABLE LOCAL, STATE, AND FEDERAL LAWS GOVERNING EXCAVATION. TRENCH SIDE SLOPES SHALL MEET OCCUPATIONAL SAFETY AND HEALTH ADMINISTRATION (OSHA) STANDARDS THAT ARE IN EFFECT AT THE TIME OF CONSTRUCTION. SHEETING, SHORING, AND BRACING WILL BE REQUIRED WHEN SIDE SLOPE STANDARDS ARE NOT MET. A TRENCH PULL BOX, MEETING OSHA STANDARDS, WILL BE ACCEPTABLE. THE APPARENT LOW BIDDER WILL SUBMIT DETAILED PLANS AND SPECIFICATIONS FOR TRENCH SAFETY SYSTEMS WHEN TRENCH EXCAVATION WILL EXCEED A DEPTH OF FIVE (5) FEET THAT MEET OSHA STANDARDS THAT ARE IN EFFECT AT THE TIME OF CONSTRUCTION.

4. ALL CONSTRUCTION OPERATIONS ARE TO BE ACCOMPLISHED IN ACCORDANCE WITH APPLICABLE REGULATIONS OF THE OSHA. COPIES OF OSHA STANDARDS MAY BE PURCHASED FROM THE U.S. GOVERNMENT PRINTING OFFICE; INFORMATION AND RELATED REFERENCE MATERIALS MAY BE OBTAINED FROM OSHA, 903 SAN JACINTO, AUSTIN, TEXAS 78701.

5. THE CONTRACTOR SHALL OBTAIN ALL CONSTRUCTION PERMITS REQUIRED FROM THE CITY OF ROCKWALL PRIOR TO COMMENCEMENT OF WORK.

6. THE CITY OF ROCKWALL (972–771–7746) AND TXDOT (972–962–3617) ARE TO BE NOTIFIED BY TELEPHONE AT LEAST 48 HOURS IN ADVANCE OF ALL CONSTRUCTION, FOLLOWED BY A LETTER OF CONFIRMATION, TO THE CITY.

7. THE CONTRACTOR SHALL GIVE NOTICE TO ALL AUTHORIZED INSPECTORS, SUPERINTENDENTS, OR PERSONS IN CHARGE OF PRIVATE AND PUBLIC UTILITIES AFFECTED BY THESE OPERATIONS PRIOR TO COMMENCEMENT OF WORK.

8. THE CONTRACTOR SHALL VERIFY ALL CONDITIONS AND DIMENSIONS AT THE JOB SITE AND NOTIFY THE OWNER'S REPRESENTATIVE OF ANY OMISSIONS, DISCREPANCIES, OR DIMENSIONAL ERRORS PRIOR TO BEGINNING OR FABRICATING ANY WORK OR MATERIALS. OTHERWISE THE CORRECTIONS (AND ASSOCIATED COST) WILL BE THE RESPONSIBILITY OF THE CONTRACTOR.

9. THE CONTRACTOR IS TO TAKE ALL DUE PRECAUTIONS TO PROTECT EXISTING FACILITIES FROM DAMAGE. ANY DAMAGE TO EXISTING FACILITIES INCURRED AS A RESULT OF THESE CONSTRUCTION OPERATIONS ARE TO BE REPAIRED IMMEDIATELY BY THE CONTRACTOR TO AT LEAST THE PRE–EXISTING CONDITION AT THE CONTRACTOR'S EXPENSE.

10. THE CONTRACTOR SHALL BE RESPONSIBLE FOR REPAIRING ANY DAMAGE CAUSED BY THESE CONSTRUCTION OPERATIONS OUTSIDE THE DESIGNATED WORK AREA WITH EQUAL OR BETTER QUALITY MATERIAL AT THE CONTRACTOR'S EXPENSE.

11. ALL EXISTING MONUMENTS, PROPERTY PINS, OR IRON RODS SHALL BE PRESERVED BY THE CONTRACTOR. IF ANY OF THESE ITEMS NEEDS TO BE REMOVED OR DISRUPTED TO ACCOMMODATE CONSTRUCTION, THE CONTRACTOR SHALL BE FULLY RESPONSIBLE FOR REPLACING IT BACK TO ITS ORIGINAL LOCATION AND/OR ELEVATION AT THE CONTRACTOR'S EXPENSE.

12. NO TREES SHALL BE CUT OR REMOVED EXCEPT ON SPECIFIC APPROVAL BY THE CITY OF ROCKWALL. ANY TREES THAT ARE APPROVED FOR REMOVAL MUST BE REMOVED IN A MANNER WHICH DOES NOT IMPACT TREES THAT ARE TO BE PRESERVED.

13. THE CONTRACTOR IS RESPONSIBLE FOR THE REMOVAL AND DISPOSAL OF STUMPS, ROOTS, AND VEGETATION FROM THE PROJECT SITE.

14. ALL TREES, BUSHES, AND BRUSH THAT MUST BE REMOVED IN ORDER TO PROCEED WITH CONSTRUCTION SHALL BE CONSIDERED INCIDENTAL TO CONSTRUCTION AND NOT MEASURED SEPARATELY FOR PAYMENT.

15. VEGETATION MUST BE PRUNED TO PROVIDE CLEARANCE FOR STRUCTURES, VEHICULAR TRAFFIC, AND EQUIPMENT BEFORE DAMAGE OCCURS (RIPPING OF BRANCHES, ETC.). ALL FINISHED PRUNING IS TO BE DONE ACCORDING TO RECOGNIZED, APPROVED STANDARDS OF THE INDUSTRY (REFER TO THE "NATIONAL ARBORIST ASSOCIATION PRUNING STANDARDS FOR SHADE TREES").

16. THE CONTRACTOR IS TO COMPLY WITH ALL APPLICABLE LOCAL, STATE, AND FEDERAL REQUIREMENTS REGARDING EXCESS AND WASTE MATERIAL, INCLUDING METHODS OF HANDLING AND DISPOSAL.

17. THE LOCATION FOR THE DISPOSAL OF CONSTRUCTION MATERIAL SHALL BE APPROVED BY THE CITY OF ROCKWALL DEPARTMENT OF ENGINEERING AND PUBLIC WORKS PRIOR TO THE START OF CONSTRUCTION.

18. MATERIAL MAY NOT BE STOCKPILED WITHIN THE 100–YEAR FLOODPLAIN.

19. INTENTIONAL RELEASE OF VEHICLE OR EQUIPMENT FLUIDS ONTO THE GROUND IS NOT ALLOWED. CONTAMINATED SOIL RESULTING FROM AN ACCIDENTAL SPILL IS TO BE REMOVED AND DISPOSED OF PROPERLY AT THE CONTRACTOR'S EXPENSE.

CONSTRUCTION

1. THE CONTRACTOR SHALL NOTIFY THE CITY OF ROCKWALL DEPARTMENT OF ENGINEERING (972–771–7746)AND PUBLIC WORKS BY TELEPHONE (972–771–7730) AT LEAST 48 HOURS IN ADVANCE FOR ALL WATER OR WASTEWATER MODIFICATIONS,LOCATES, OR TURNOFFS.

2. ONLY THE CITY OF ROCKWALL WATER DEPARTMENT SHALL OPERATE EXISTING WATER VALVES. CONTACT THE WATER DEPARTMENT AT 972–771–7730 FOR ASSISTANCE AT LEAST 24 HOURS IN ADVANCE (EXCEPT IN THE CASE OF AN EMERGENCY).

3. FIELD ADJUSTMENTS MAY BE NECESSARY AND SHALL BE CARRIED OUT AS DIRECTED BY THE ENGINEER AT NO EXTRA PAY.

4. A MINIMUM OF 48 INCHES OF COVER, OR AS OTHERWISE NOTED ON THE PLANS, IS REQUIRED OVER ALL UTILITY LINES.

5. COMPACTION OF BACKFILL MATERIAL BY FLOODING OR JETTING WILL NOT BE PERMITTED. ALL TRENCH BACKFILLL TO BE COMPACTED TO A MIN. 95% DENSITY.

6. THE CONTRACTOR CAN OBTAIN A CONSTRUCTION METER THROUGH THE CITY OF ROCKWALL AND PAY FOR THE WATER USED.

7. DURING CONSTRUCTION AND AT THE COMPLETION OF CONSTRUCTION, THE CONTRACTOR SHALL ENSURE THAT DRAINAGE OF STORM RUNOFF IS NOT BLOCKED. THE CONTRACTOR SHALL LEVEL WASHES, RUTS, MOUNDS AND DEPRESSIONS TO GIVE THE AREA A SMOOTH FINISH. ROADWAY DITCHS AND OTHER DRAINAGE WAYS DISTURBED BY THE CONSTRUCTION SHALL BE GRADED TO ORIGINAL GRADES AND SHAPE.

8. THE CONTRACTOR IS TO MAINTAIN ACCESS TO PUBLIC AND PRIVATE FACILITIES DURING CONSTRUCTION. CONSTRUCTION ACTIVITIES ARE TO BE COORDINATED WITH THE OWNER, OWNER'S REPRESENTATIVE, AND THE CITY OF ROCKWALL.

9. THE CONTRACTOR SHALL REPAIR ANY DAMAGE TO EXISTING IRRIGATION SYSTEMS WITH NEW MATERIALS. IRRIGATION HEADS, VALVES, AND METERS MAY BE TEMPORARILY REMOVED TO ALLOW FOR CONSTRUCTION OF THE PROJECT. IRRIGATION HEADS, VALVES, AND METERS SHALL BE REPLACED IN THE SAME LOCATION AND IN WORKING ORDER.

10. THE CONTRACTOR MUST NOTIFY EACH PROPERTY OWNER 48 HOURS PRIOR TO SHUTTING OFF WATER FOR CONNECTION TO NEW MAIN.

11. THE CONTRACTOR SHALL MAINTAIN IN SERVICE THE EXISTING WATER MAINS AND SERVICE CONNECTIONS DURING ALL PHASES OF CONSTRUCTION AT NO EXTRA PAY. LEAKS CAUSED BY THE CONTRACTOR SHALL BE REPAIRED IMMEDIATELY AT THE CONTRACTOR'S EXPENSE.

12. EXISTING 16" WATER LINE TO REMAIN IN SERVICE UNTIL THE PROPOSED 16" WATER LINE IS ACCEPTED BY THE CITY.

13. ALL SALVAGEABLE MATERIALS (VALVES, FIRE HYDRANTS, VALVE BOXES, ETC.) SHALL BE DELIVERED TO THE CITY OF ROCKWALL PUBLIC WORKS YARD. ALL NON–SALVAGEABLE MATERIALS TO BECOME PROPERTY OF THE CONTRACTOR AND TO BE DISPOSED OF OFFSITE.

14. FOR EACH OPEN CUT DRIVEWAY, CONTRACTOR SHALL REPAIR DRIVEWAY WITH SIMILAR TYPE AND QUALITY MATERIALS AND MATCHING EXISTING GRADE, IN ACCORDANCE WITH THE PAVEMENT CUT AND REPAIR DETAIL ON SHEET 14, UNLESS OTHERWISE NOTED.

15. FOR EACH OPEN CUT STREET, CONTRACTOR SHALL REPAIR STREET WITH SIMILAR TYPE AND QUALITY MATERIALS AND MATCH EXISTING GRADE. IN ACCORDANCE WITH PAVING REPLACEMENT DETAIL ON SHEET 14. UNLESS OTHERWISE NOTED.

16. SITE RESTORATION INCLUDES FINAL GRADING OF ALL AREAS DISTURBED BY THE CONSTRUCTION AND THE ESTABLISHMENT OF A PERMANENT VEGETATIVE COVER ON THOSE AREAS. BROADCAST SEEDING SHALL BE PERFORMED IN CONFORMANCE WITH TxDOT SPECIFICATIONS ITEM NO. 164. THE FERTILIZER USED SHALL HAVE AN ANALYSIS OF 10–20–10 AND SHALL BE APPLIED AT A RATE OF 500 LBS PER ACRE. THE ESTABLISHMENT OF A UNIFORM PERENNIAL VEGETATIVE COVER WITH A DENSITY OF 70 PERCENT OF THE ADJACENT UNDISTURBED AREAS WILL BE REQUIRED FOR FINAL ACCEPTANCE OF THE WORK.

17. THE MAXIMUM DEFLECTION OF PIPE JOINTS SHALL NOT EXCEED THAT RECOMMENDED BY THE PIPE MANUFACTURER. IF IT IS NECESSARY TO DEFLECT THE PIPE GREATER THAN THE RECOMMENDED AMOUNT, THE CONTRACTOR SHALL PROVIDE FITTINGS. THERE SHALL BE NO ADDITIONAL COMPENSATION ALLOWED.

18. THE CONTRACTOR SHALL INSTALL BLUE ELECTRONIC MARKER SYSTEM (EMS) LOCATOR PADS ALONG THE WATER LINE EVERY 250', AT VALVES, AT CHANGES IN DIRECTION, AND AT SERVICES.

19. ALL PIPE FITTINGS SHALL BE DUCTILE IRON AND SHALL BE MECHANICAL JOINT FITTINGS UNLESS OTHERWISE NOTED IN THE PLANS. ALL FITTINGS SHALL BE WRAPPED WITH MINIMUM 8 MIL POLYWRAP PER AWWA C 105. COMPACT FITTINGS WILL BE ALLOWED. ALL FITTINGS MUST BE AMERICAN MADE. MAXIMUM ALLOWABLE WEIGHT TO BE PAID PER FITTING IS LISTED IN THE TABLE ON THE QUANTITY SHEET.

UTILITY

1. THE LOCATION AND DEPTH OF ALL EXISTING UTILITIES SHOWN ON THE PLANS ARE APPROXIMATE AND THERE MAY BE OTHER UNKNOWN UTILITIES EXISTING NOT SHOWN ON THE PLANS THAT SHOULD BE VERIFIED AND PROTECTED BY THE CONTRACTOR PRIOR TO COMMENCEMENT OF CONSTRUCTION. NO EXTRA PAY ITEM.

2. THE CONTRACTOR SHALL ADJUST ALL EXISTING AND PROPOSED UTILITIES TO PROPOSED GRADE.

3. THE CONTRACTOR SHALL BE RESPONSIBLE FOR PROTECTING ALL UTILITIES ENCOUNTERED DURING CONSTRUCTION OPERATIONS. ANY DAMAGE TO UTILITIES DONE BY THE CONTRACTOR DURING CONSTRUCTION SHALL BE REPAIRED TO THE SATISFACTION OF THE UTILITY OWNER AND THE CITY OF ROCKWALL AT THE ENTIRE EXPENSE OF THE CONTRACTOR.

4. THE CONTRACTOR SHALL COORDINATE INTERRUPTIONS OF ALL UTILITIES AND SERVICES WITH THE APPLICABLE UTILITY COMPANIES AND/OR AGENCIES. ALL WORK IS TO BE DONE IN ACCORDANCE WITH THE REQUIREMENTS OF THE APPLICABLE UTILITY COMPANY OR AGENCY INVOLVED. THE CONTRACTOR SHALL CONTACT THE TEXAS ONE–CALL SYSTEM FOR UTILITY LOCATIONS PRIOR TO ANY WORK IN PUBLIC EASEMENTS OR RIGHT–OF–WAY AT 1–800 545–6005.

ATMOS GAS	800–344–8377
ONCOR	972–888–1302
COMCAST	214–320–7546
VERIZON COMMUNICATIONS	972–434–0622
AT&T	214–745–8200
NORTH TEXAS MUNICIPAL WATER DISTRICT	972–442–5405
BLACKLAND WSC	972–771–6375

5. WHEN AN UN–LOCATED OR INCORRECTLY LOCATED UNDERGROUND UTILITY OR A BREAK IN A UTILITY IS ENCOUNTERED DURING SITE WORK OPERATIONS, THE CONTRACTOR IS TO NOTIFY THE APPLICABLE UTILITY COMPANY IMMEDIATELY TO OBTAIN PROCEDURE DIRECTIONS. NO EXTRA PAY ITEM.

6. THE CONTRACTOR SHALL BE REQUIRED TO ARRANGE TEMPORARY/PERMANENT RELOCATION, SUPPORT AND/OR PROTECT ALL POWER, ELECTRIC, TELEPHONE, OR LIGHT POLES THAT MAY INTERFERE WITH CONSTRUCTION. COORDINATION WITH THE VARIOUS UTILITY COMPANIES SHALL BE THE CONTRACTOR'S RESPONSIBILITY. NO EXTRA PAY ITEM.

7. CONTRACTOR IS RESPONSIBLE FOR PERSONNEL SAFETY IN PROXIMITY OF OVERHEAD POWER UTILITIES. CONTRACTOR SHALL ARRANGE FOR POLE RELOCATIONS OR DE–ENERGIZING LINES AS NEEDED. NO EXTRA PAY ITEM.

TRAFFIC CONTROL

1. THE CONTRACTOR IS RESPONSIBLE FOR PLACEMENT AND MAINTENANCE OF ALL NECESSARY BARRICADES AS REQUIRED BY THE CITY OF ROCKWALL AND TxDOT. CONTRACTOR SHALL PROVIDE, INSTALL, AND MAINTAIN TRAFFIC CONTROL DEVICES IN CONFORMANCE WITH THE 2006 TEXAS MANUAL OF UNIFORM TRAFFIC CONTROL DEVICES (TMUTCD) TEXAS DEPARTMENT OF TRANSPORTATION. CONTRACTOR SHALL SUBMIT A TRAFFIC CONTROL PLAN SIGNED AND SEALED BY AN ENGINEER IN THE STATE OF TEXAS, FOR APPROVAL PRIOR TO CONSTRUCTION. THE TRAFFIC CONTROL PLAN SHALL BE SUBMITTED FOR APPROVAL BY THE CITY OF ROCKWALL AND TxDOT.

2. NO STOP OR YIELD SIGN IS TO BE RELOCATED OR REMOVED WITHOUT PRIOR APPROVAL BY THE CITY AND TxDOT. THE CONTRACTOR MUST CALL TxDOT (972–962–3617) AND OBTAIN PERMISSION FOR ANY CHANGES IN THESE SIGNS.

3. NORMAL TRAFFIC CONDITIONS MUST BE MAINTAINED AT ALL TIMES ON THIS PROJECT UNLESS SPECIFIED OTHERWISE IN THE PLANS AND SPECIFICATIONS. THE TRAVELWAY WIDTH SHALL NOT BE LESS THAN 10 FEET, FOR EACH LANE.

4. ACCESS TO ABUTTING PROPERTY DURING THE CONSTRUCTION OF THIS PROJECT MUST BE MAINTAINED FOR EMERGENCY AND LOCAL TRAFFIC AT ALL TIMES.

STORM WATER POLLUTION PREVENTION

1. UNLESS OTHERWISE NOTED, ALL STORM WATER POLLUTION PREVENTION MEASURES SHALL CONFORM TO THE CITY OF ROCKWALL STANDARDS OR TO APPLICABLE GUIDELINES OF THE NORTH CENTRAL TEXAS COUNCIL OF GOVERNMENTS, STORM WATER QUALITY BEST MANAGEMENT PRACTICES FOR CONSTRUCTION ACTIVITIES, LATEST EDITION OR AMENDMENTS, FOR COMPLIANCE WITH NATIONAL POLLUTION DISCHARGE ELIMINATION SYSTEM REQUIREMENTS.

2. CONTRACTOR IS RESPONSIBLE FOR MAINTAINING SURFACE DRAINAGE AND EROSION CONTROL FACILITIES ON SITE DURING CONSTRUCTION.

3. THE CONTRACTOR IS RESPONSIBLE FOR KEEPING STREETS AND SIDEWALKS ADJACENT TO THE PROJECT FREE OF MUD AND DEBRIS FROM THE CONSTRUCTION AT ALL TIMES.

4. CONTRACTOR IS RESPONSIBLE FOR OBTAINING AND COMPLETING ANY APPLICABLE LOCAL, STATE, OR FEDERAL PERMITTING REQUIREMENTS WHICH MAY APPLY. NO EXTRA PAY ITEM.

THRUST BLOCKING & JOINT RESTRAINTS

1. ALL PIPE FITTINGS SHALL BE RESTRAINED WITH MEGA–LUG SERIES 2000PV MECHANICAL JOINT RESTRAINT GLANDS OR APPROVED EQUAL AND THRUST BLOCKED AT ALL HORIZONTAL AND VERTICAL CHANGES IN PIPE DIRECTION. NO EXTRA PAY ITEM FOR MEGA–LUG OR APPROVED EQUAL RESTRAINED JOINTS, OR FOR THRUST BLOCKING.

2. ALL VALVES SHALL HAVE CONCRETE SUPPORT BLOCKING. NO EXTRA PAY ITEM.

RECORD DRAWING

THESE RECORD DRAWINGS WERE PREPARED BY THE ENGINEER BASED UPON AS–CONSTRUCTED DRAWINGS PROVIDED BY THE CONSTRUCTION CONTRACTOR, WHO REPRESENTED THAT ALL FIELD CHANGES AND OTHER DEVIATIONS FROM THE APPROVED CONSTRUCTION DRAWINGS WERE INCLUDED.

NO.	REVISION	BY	DATE

DESIGNED BY: EJH
DRAWN BY: PMH
CHECKED BY: FCG
APPROVED BY: FCG
DATE: MARCH 22, 2017

ATKINS
18383 PRESTON RD., SUITE 500
DALLAS, TEXAS 75252 - (972) 818-7275
TBPE REG. NO. F-474

TEXAS REGISTERED PROFESSIONAL ENGINEER FRANCISCO C. GUERRERO 95464 LICENSED 01/03/2018

F.M. 3549 16" WATERLINE RELOCATION PROJECT

GENERAL NOTES

SHEET NO. 2 OF 14 SHEETS

FILE NO. RW–WL–GN01
PROJECT NO. 100049910

LEGEND OF UTILITY TYPES

ABANDONED UTILITY — UGU
PROPOSED UTILITY — W
UKNOWN

Communications

AT&T/SPRINT (FIBER/DUCT) — FO — FO
AT&T (CABLE) — UGT — UGT
UNKNOWN (CATV) — UG CATV — UG CATV

Gas / Petroleum

ATMOS — G — G — G

Potable Water

NTMWD
BLACK LAND WS CO — W — W — W
CITY OF ROCKWALL

Electric / Power

FARMERS ELEC. COOP — UGE — UGE

LEGEND OF UTILITY SYMBOLS

TEST HOLE
END CAP
UTILITY CONTINUATION

TELEPHONE CABINET
TELEPHONE PEDESTAL
TELEPHONE HANDHOLE (VAULT)
TELEPHONE MANHOLE
TELEPHONE POLE
TELEPHONE POLE W/RISER
FIBER HANDHOLE

WATER VAULT
WATER VALVE
WATER METER
WATER MANHOLE
FIRE HYDRANT

GAS VENT PIPE (GAS RISER)
GAS VALVE
GAS METER
GAS TEST STATION

WASTE WATER MANHOLE
WASTE WATER CLEANOUT
STORM SEWER MANHOLE
STORM SEWER INLET

CATV HANDHOLE
CATV CABINET
CATV PEDESTAL

LIGHT POLE
ELECTRIC JUNCTION BOX (CABINET)
ELECTRIC POLE (POWER)
ELECTRIC POLE W/RISER
TRANSMISSION POLE
ELECTRIC HANDHOLE
ELECTRIC MANHOLE
SIGNAL POLE
SIGNAL HANDHOLE/BOX

PROPOSED FIRE HYDRANT
PROPOSED GATE VALVE
PROPOSED BUTTERFLY VALVE
PROPOSED AIR RELEASE VALVE

LEGEND

PROPOSED RIGHT OF WAY
EXISTING RIGHT OF WAY
EXISTING EASEMENT LINE
PROPOSED CURB
PROPOSED SIDEWALK
EXISTING PAVEMENT

LEGEND

× 101.8 SPOT ELEVATION
CULVERT PIPE
RAILROAD CONTROL BOX
RAILROAD SIGNAL
RAILROAD SWITCH
POST
STREET LIGHT
UTILITY METER
UTILITY POLE
96 HORIZONTAL CONTROL POINT
135.26 101 VERTICAL CONTROL POINT
GUY WIRE
MANHOLE
LAMP POST
TRAFFIC SIGNAL
ELECTRIC TOWER
GUY POLE
TELEPHONE PEDESTAL
ELECTRIC UTILITY BOX
ELECTRIC TRANSFORMER
TRAFFIC SIGNAL CONTROL BOX
SIGN
ANTENNA
MAIL BOX
PARKING METER
FLAG POLE
SATELLITE DISH
STUMP
SHRUB
SMALL TREE OR SAPLING
CONIFEROUS TREE

NOTES:

1. CONTRACTOR SHALL COORDINATE WITH CITY OF ROCKWALL FOR STAGING AND STORAGE AREAS.
2. CONSTRUCTION STARTUP SHALL BE COORDINATED WITH CITY OF ROCKWALL A MINIMUM OF 48 HOURS BEFORE CONSTRUCTION IS TO BEGIN.
3. THE CONTRACTOR IS RESPONSIBLE FOR VERIFYING THE LOCATION OF ALL EXISTING UTILITIES PRIOR TO CONSTRUCTION.
4. ALL PROPOSED WATER LINES PIPE MATERIAL SHALL BE, 4" TO 12" PVC C900 DR–14, 16" PVC C905 DR–18.
5. PROPOSED WATERLINE SHALL MAINTAIN A MINIMUM COVER OF 4 FEET FROM OUTSIDE TOP OF PIPE.
6. RECONNECT ALL EXISTING SERVICE LEADS TO PROPOSED PIPE.
7. CONTRACTOR SHALL REMOVE AND SALVAGE ABANDONED VALVE STACKS.
8. ALL FITTINGS, BENDS, AND VALVES SHALL BE RESTRAINED.

F.M 3549 16" WATERLINE RELOCATION CONTROL POINTS

CONTROL POINT	STATION	OFFSET (FT)	N	E	ELEVATION (FT)	DESCRIPTION
1	21+84.25	22.06' RT	7025756.000	2607608.839	604.099	IR / 5/8" CIRS
2	28+27.54	36.27' LT	7026398.005	2607537.752	609.186	IR / 5/8" CIRS
529	33+14.08	1.42' RT	7026885.200	2607565.780	610.030	IR / MAG NAIL
3	33+26.18	36.34' RT	7026897.991	2607600.459	605.764	IR / 5/8" CIRS
4	37+52.02	77.45' TR	7027327.093	2607622.623	605.316	IR / 5/8" CIRS
5	41+22.92	18.18' LT	7027692.958	2607516.141	612.850	IR / 5/8" CIRS
100	44+16.83	110.39' LT	7021984.987	2607418.118	612.718	CHP / SX
6	46+83.51	18.30' LT	7028253.443	2607504.908	611.386	IR / 5/8" CIRS

Point Table

Point #	Northing	Easting
1001	7025577.25	2607530.67
1002	7025670.11	2607533.46
1003	7025841.43	2607530.06
1004	7026214.83	2607522.65
1005	7026241.36	2607522.13
1006	7026342.40	2607520.12
1007	7026352.38	2607530.11
1008	7026367.39	2607530.10
1009	7026522.39	2607527.44
1010	7026532.39	2607527.28
1011	7026543.19	2607516.14
1012	7026553.46	2607515.93
1013	7026689.58	2607513.23
1014	7026789.83	2607511.24
1015	7026822.43	2607477.33
1016	7026904.39	2607475.70
1017	7026938.04	2607508.30
1018	7027062.95	2607505.22
1019	7027168.28	2607500.26
1020	7027178.87	2607509.66
1021	7027450.08	2607494.52
1022	7027673.16	2607489.71
1023	7027799.32	2607487.21
1024	7027823.13	2607486.74
1025	7027848.78	2607486.23
1026	7028131.36	2607480.62
1027	7028248.70	2607478.29
1028	7026983.09	2607507.41
1029	7027245.20	2607505.27
1030	7027511.87	2607492.91
1031	7026839.03	2607477.00
1032	7026903.44	2607475.72
1033	7026793.00	2607507.95

F.M. 3549 16" WATERLINE RELOCATION PROJECT
QUANTITIES

ITEM NUMBER	DESCRIPTION	UNIT	SH 4	SH 5	SH 6	SH 7	SH 8	SH 9	SH 10	SH 11	NET TOTAL
	MOBILIZATION	LS									1
	TIE TO EXISTING 16" WATER LINE	EA	1	1	1						3
	TIE TO EXISTING 12" WATER LINE	EA			1						1
	TIE TO EXISTING 8" WATER LINE	EA					1	1			2
	16" WATERLINE, C-905, DR-18 PVC, OPEN CUT	LF	424	370	438	500	500	262			2494
	12" WATERLINE, C-900, CLASS 200 PVC, OPEN CUT	LF			10						10
	16" WATERLINE, C-905, DR-18 PVC, OPEN CUT WITH 30" STEEL ENCASEMENT	LF			65						65
	REMOVE & SALVAGE EXIST FIRE HYDRANT	EA	1	1	1	2	2	1			8
	FIRE HYDRANT ASSEMBLY	EA	1	1	2	2	1	1			8
	16" BUTTERFLY VALVE	EA	1		2	1		1			5
	12" GATE VALVE	EA			1						1
	8" GATE VALVE	EA					1	1			2
	6" GATE VALVE	EA	1	1	2	2	1	1			8
	4" GATE VALVE	EA					1				1
	2" AIR RELEASE VALVE	EA					1				1
	3" AIR RELEASE VALVE	EA		1	1						2
	DUCTILE IRON FITTINGS	TON	0.78	0.78	2.45	1.02	1.03	0.73			6.78
	* 16" PLUG (LBS)	EA	1	1	1			1			4
	* 12" PLUG (LBS)	EA			1						1
	* 8" PLUG (LBS)	EA					1	1			2
	* 6" PLUG (LBS)	EA	1	1	1	2	2	1			8
	* 4" PLUG (LBS)	EA					1				1
	* 16" 11.25° BEND (LBS)	EA	1								1
	* 16" 45° BEND (LBS)	EA	1	2	6	2					11
	* 12" 45° BEND (LBS)	EA			1						1
	* 12" 90° BEND (LBS)				1						1
	* 16"x6" MJ TEE (LBS)	EA	1	1	2	2	1	1			8
	* 16"x8" MJ TEE (LBS)	EA					2	1			3
	* 16"x12" MJ TEE (LBS)	EA			1						1
	* 8"x4" MJ REDUCER (LBS)	EA					1				1
	TRENCH SAFETY SYSTEM	LF	424	370	513	500	500	262			2569
	REMOVE/REPLACE REINFORCED CONCRETE PAVEMENT	SY			50		22	14			85
	REMOVE/RELACE ASPHALT PAVEMENT	SY				13					13
	EROSION & SEDIMENTATION CONTROL MEASURES										
	SILT FENCE	LF							1209	159	1368
	INLET PROTECTION	EA							2		2
	TRAFFIC CONTROL PLAN	LS									1
	SITE RESTORATION & REVEGETATION	SY							10074	2139	12213

* FOR CONTRACTOR'S INFORMATION ONLY

FITTING	WEIGHT
16" PLUG	150 LBS.
12" PLUG	85 LBS.
8" PLUG	45 LBS.
6" PLUG	25 LBS.
4" PLUG	15 LBS.
16" 11.25° BEND	385 LBS.
16" 45° BEND	380 LBS.
12" 45° BEND	215 LBS.
12" 90° BEND	255 LBS.
16"x6" MJ TEE	615 LBS.
16"x8" MJ TEE	625 LBS.
16"x12" MJ TEE	660 LBS.

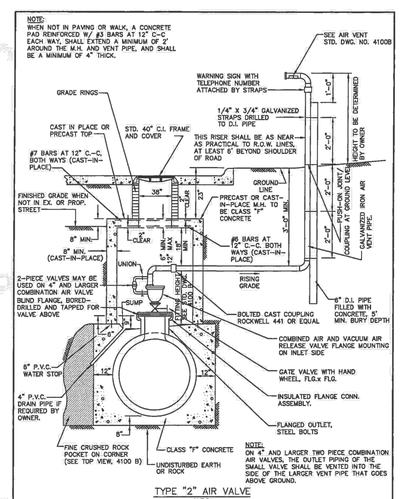

TYPE "2" AIR VALVE
N.T.S.

COMBINATION AIR VACUUM VALVE TYPE "2" — Berth Central Texas Council of Governments — STANDARD SPECIFICATION REFERENCE 502.6 — DATE OCT. '04 — STANDARD DRAWING NO. 4100A

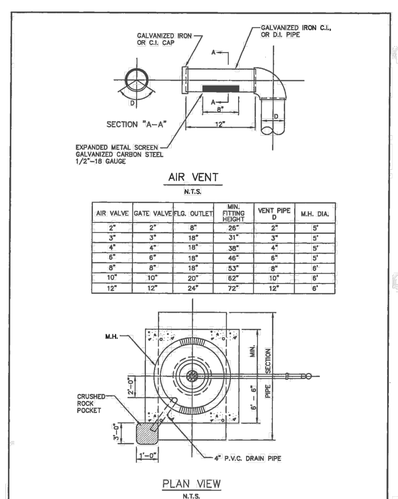

AIR VENT
N.T.S.

AIR VALVE	GATE VALVE	FLG. OUTLET	MIN. FITTING HEIGHT	VENT PIPE D	M.H. DIA.
2"	2"	8"	26"	2"	5'
3"	3"	18"	31"	3"	5'
4"	4"	18"	38"	4"	5'
6"	6"	18"	46"	6"	5'
8"	8"	18"	53"	8"	6'
10"	10"	20"	62"	10"	6'
12"	12"	24"	72"	12"	6'

PLAN VIEW
N.T.S.

AIR RELEASE VALVE TYPE "2" — Berth Central Texas Council of Governments — STANDARD SPECIFICATION REFERENCE 502.6 — DATE OCT. '04 — STANDARD DRAWING NO. 4100B

RECORD DRAWING
THESE RECORD DRAWINGS WERE PREPARED BY THE ENGINEER BASED UPON AS–CONSTRUCTED DRAWINGS PROVIDED BY THE CONSTRUCTION CONTRACTOR, WHO REPRESENTED THAT ALL FIELD CHANGES AND OTHER DEVIATIONS FROM THE APPROVED CONSTRUCTION DRAWINGS WERE INCLUDED.

NO.	REVISION	BY	DATE
1	ADDENDUM 1	FCG	7/28/17
2	HORIZONTAL ALIGNMENT CHANGES @ AIRPORT RD.	FCG	10/20/17

DESIGNED BY: EJH
DRAWN BY: PMH
CHECKED BY: FCG
APPROVED BY: FCG
DATE: MARCH 22, 2017

ATKINS
18383 PRESTON RD. SUITE 500
DALLAS, TEXAS 75252 - (972) 818-7275
TBPE REG. NO. F-474

TEXAS FRANCISCO C. GUERRERO 84184 LICENSED PROFESSIONAL ENGINEER 07/09/2018

F.M. 3549 16" WATERLINE RELOCATION PROJECT

LEGEND, NOTES AND QUANTITIES

SHEET NO. 3 OF 14 SHEETS

FILE NO. RW–WL–PP
PROJECT NO. 100049910

Jan 02, 2018 - 5:12pm mike2982 K:\Projects\HOU\100049910-Rockwall\02 Drawings\Sheets\ PV-VL-PP.dwg

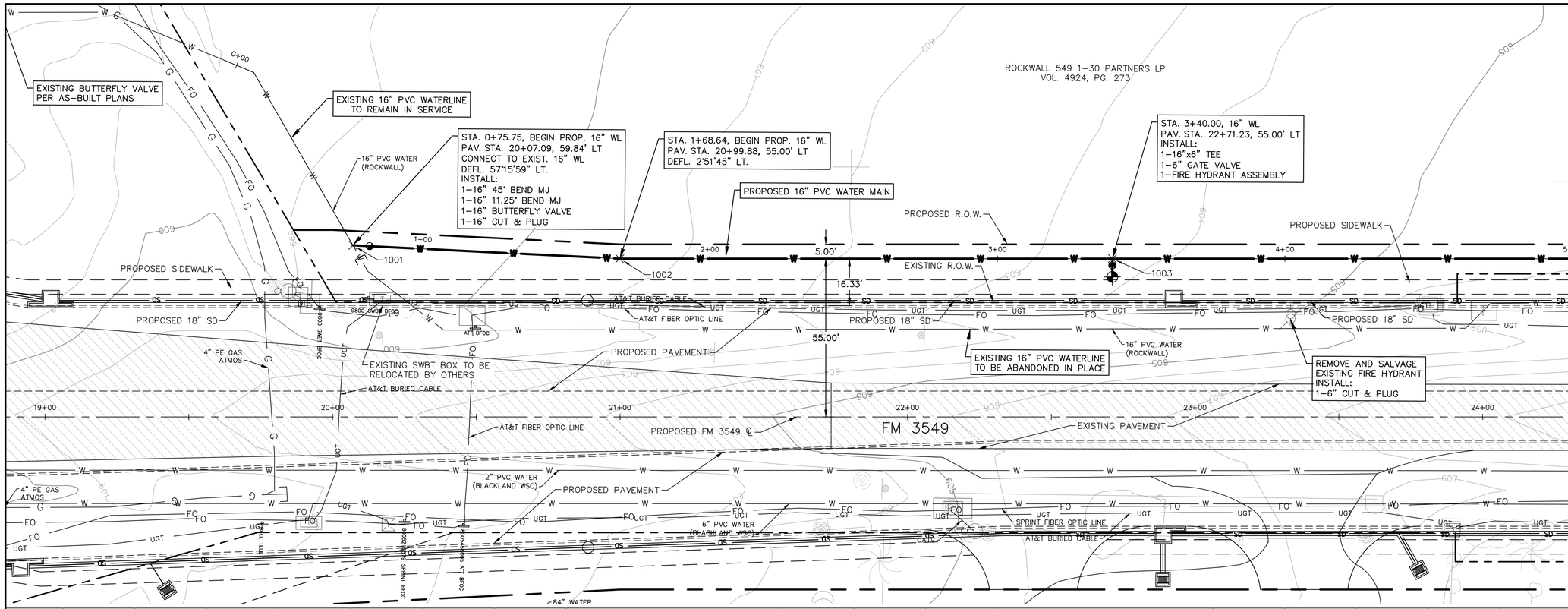

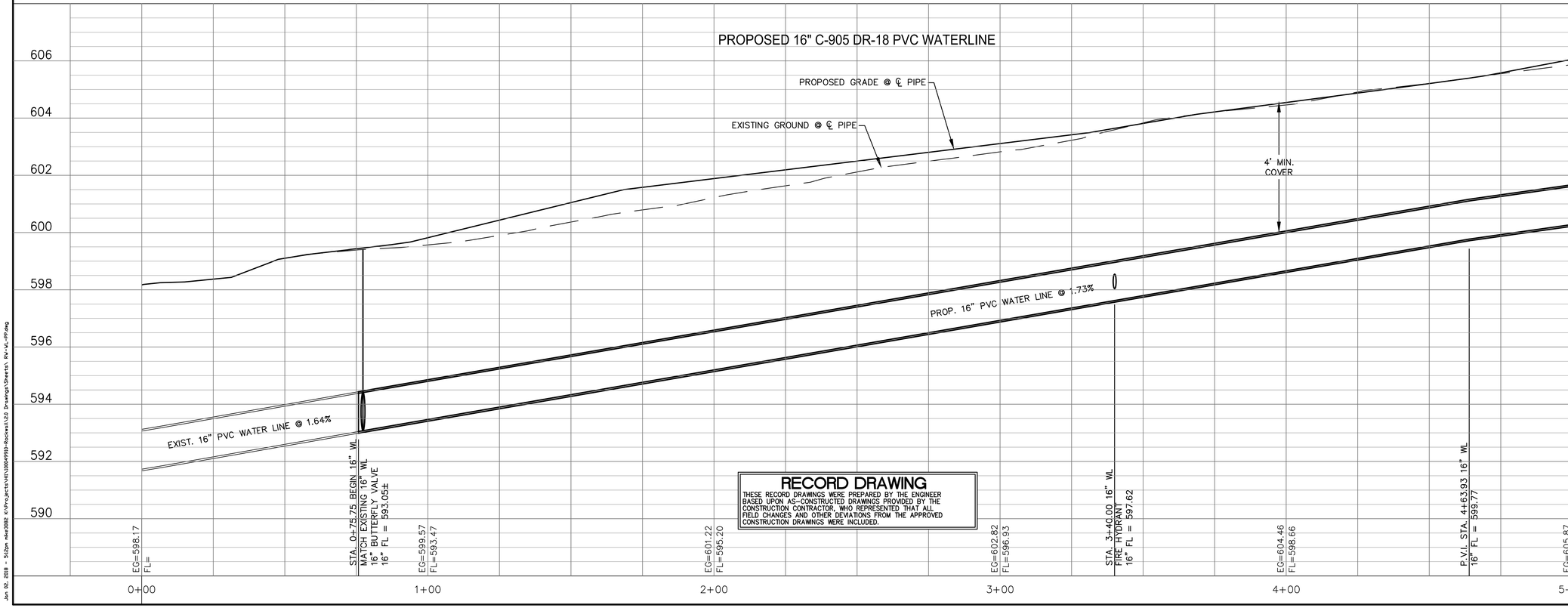

NO.	REVISION	BY	DATE

DESIGNED BY: EJH
DRAWN BY: PMH
CHECKED BY: FCG
APPROVED BY: FCG
DATE: MARCH 22, 2017

ATKINS
18383 PRESTON RD., SUITE 500
DALLAS, TEXAS 75252 - (972) 818-7275
TBPE REG. NO. F-474

STATE OF TEXAS
FRANCISCO C. GUERRERO
83-164
LICENSED
PROFESSIONAL ENGINEER
01/03/2018

F.M. 3549 16" WATERLINE RELOCATION PROJECT

WATER LINE PLAN AND PROFILE STA. 1+00 TO STA. 5+00

SHEET NO. 4 OF 14 SHEETS

FILE NO. RW-WL-PP
PROJECT NO. 100049910

Jan 02, 2018 - 5:13pm mkx2882 K:\Projects\US\100049910-Rockwall\CD Drawings\Sheets\RW-WL-PP.dwg

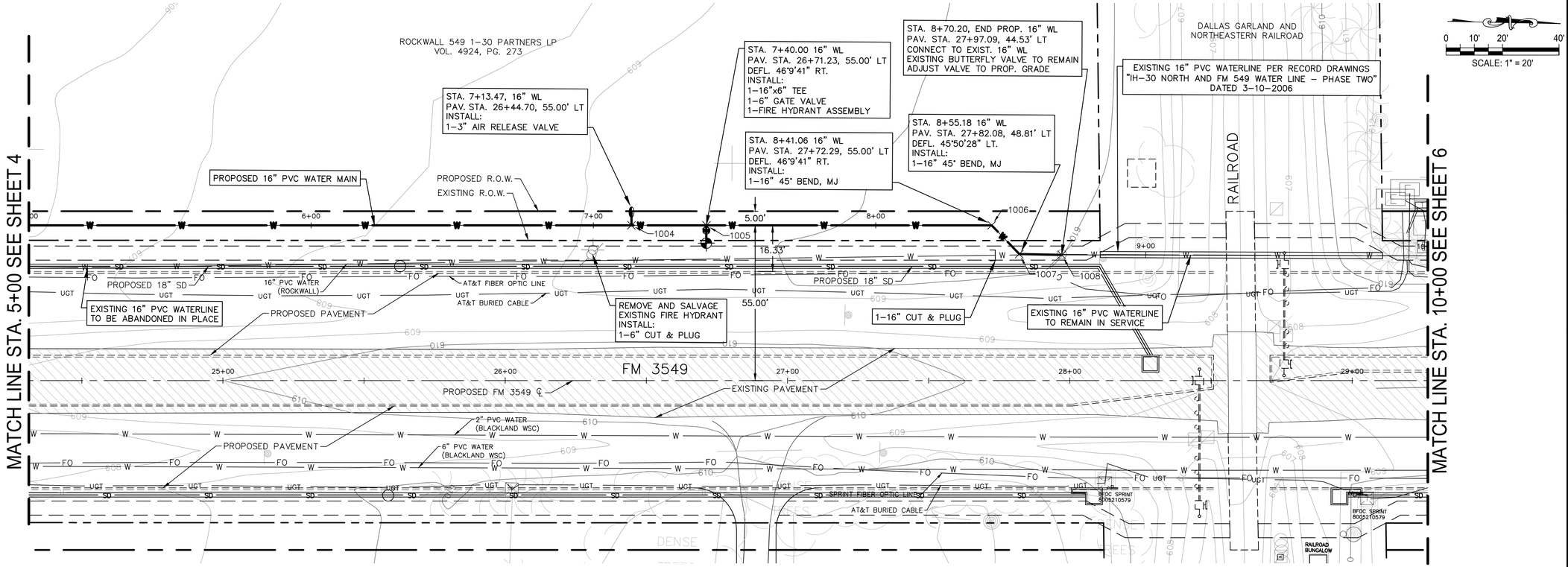

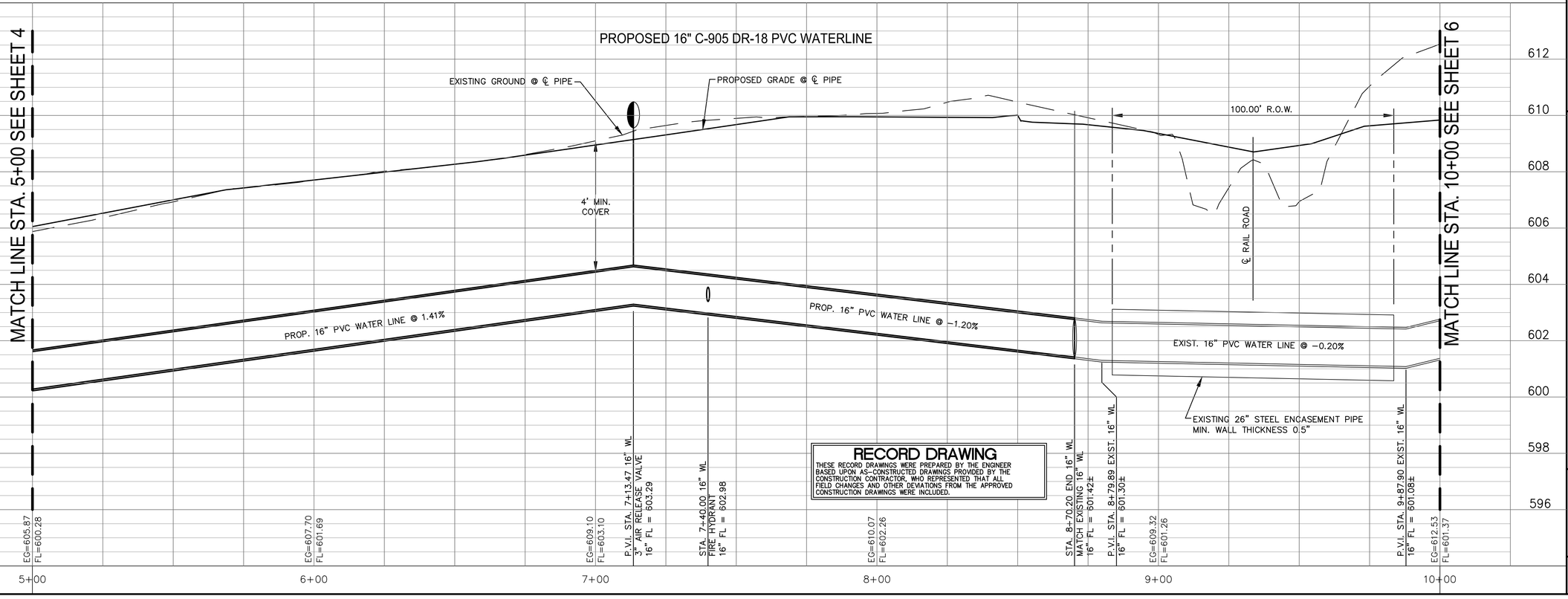

RECORD DRAWING

THESE RECORD DRAWINGS WERE PREPARED BY THE ENGINEER BASED UPON AS-CONSTRUCTED DRAWINGS PROVIDED BY THE CONSTRUCTION CONTRACTOR, WHO REPRESENTED THAT ALL FIELD CHANGES AND OTHER DEVIATIONS FROM THE APPROVED CONSTRUCTION DRAWINGS WERE INCLUDED.

NO.	REVISION	BY	DATE

DESIGNED BY: EJH
DRAWN BY: PMH
CHECKED BY: FCG
APPROVED BY: FCG
DATE: MARCH 22, 2017

ATKINS
18383 PRESTON RD., SUITE 500
DALLAS, TEXAS 75252 - (972) 818-7275
TBPE REG. NO. F-474

STATE OF TEXAS
FRANCISCO C. GUERRERO
85-164
LICENSED PROFESSIONAL ENGINEER
01/03/2018

F.M. 3549 16" WATERLINE RELOCATION PROJECT

WATER LINE PLAN AND PROFILE STA. 5+00 TO STA. 10+00

SHEET NO. 5 OF 14 SHEETS

FILE NO. RW-WL-PP
PROJECT NO. 100049910

Jan 02, 2018 - 9:13pm mkc2082 K:\Projects\US\100049910-Rockwall\03 Drawings\Sheets\RW-WL-PP.dwg

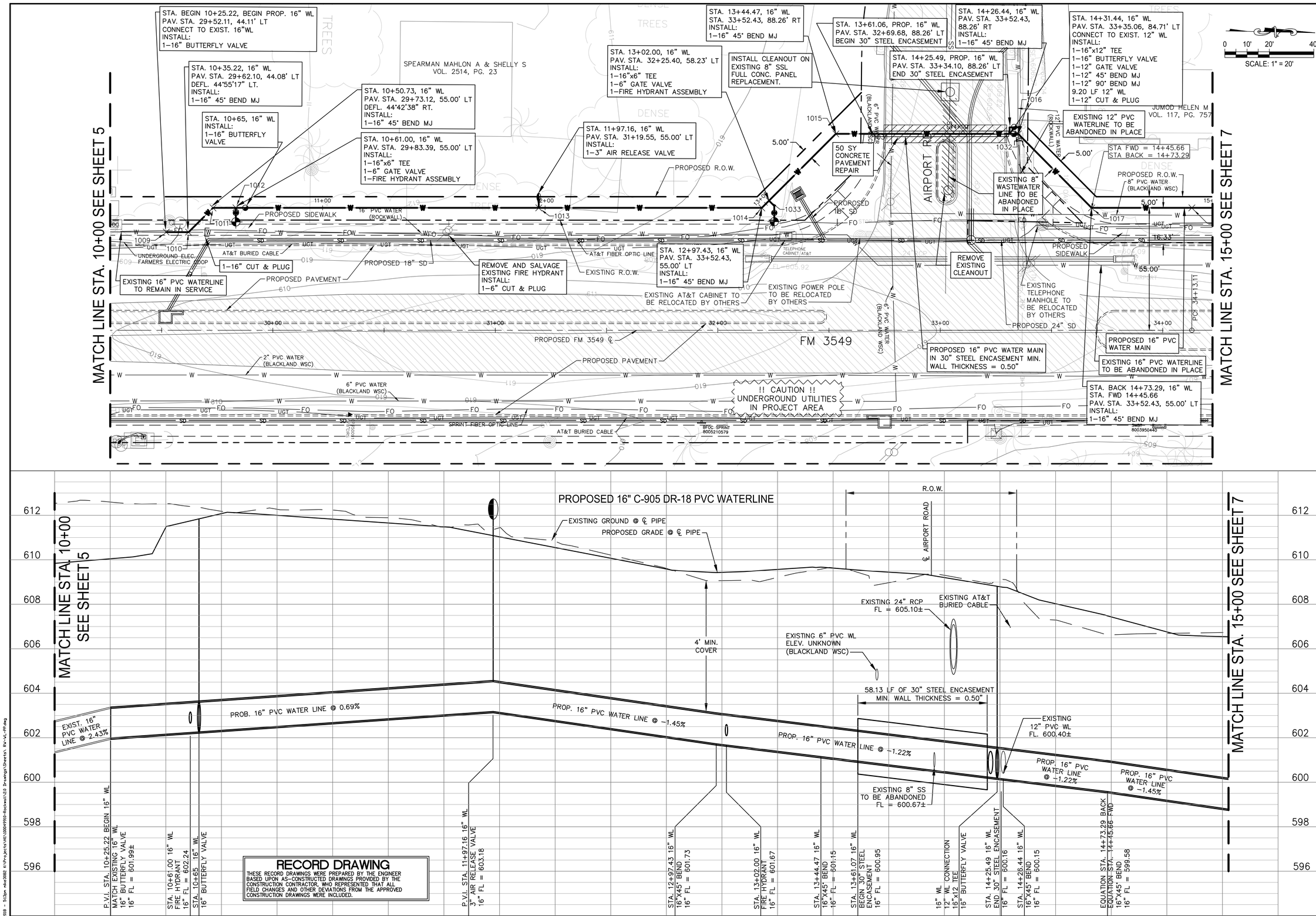

RECORD DRAWING

THESE RECORD DRAWINGS WERE PREPARED BY THE ENGINEER BASED UPON AS-CONSTRUCTED DRAWINGS PROVIDED BY THE CONSTRUCTION CONTRACTOR, WHO REPRESENTED THAT ALL FIELD CHANGES AND OTHER DEVIATIONS FROM THE APPROVED CONSTRUCTION DRAWINGS WERE INCLUDED.

NO.	REVISION	BY	DATE
1	HORIZONTAL ALIGNMENT CHANGES @ AIRPORT RD.	FCG	10/20/17

DESIGNED BY: EJH
DRAWN BY: PMH
CHECKED BY: FCG
APPROVED BY: FCG
DATE: MARCH 22, 2017

ATKINS
18333 PRESTON RD., SUITE 500
DALLAS, TEXAS 75252 - (972) 818-7275
TBPE REG. NO. F-474

TEXAS REGISTERED PROFESSIONAL ENGINEER FRANCISCO C. GUERRERO 85464 LICENSED 01/03/2018

F.M. 3549 16" WATERLINE RELOCATION PROJECT

WATER LINE PLAN AND PROFILE STA. 10+00 TO STA. 15+00

SHEET NO. 6 OF 14 SHEETS

FILE NO. RW-WL-PP
PROJECT NO. 100049910

Jan 02, 2018 - 9:13am ms4e2682 K:\Projects\US\100049910-Rockwall\03 Drawings\Sheets\RW-WL-PP.dwg

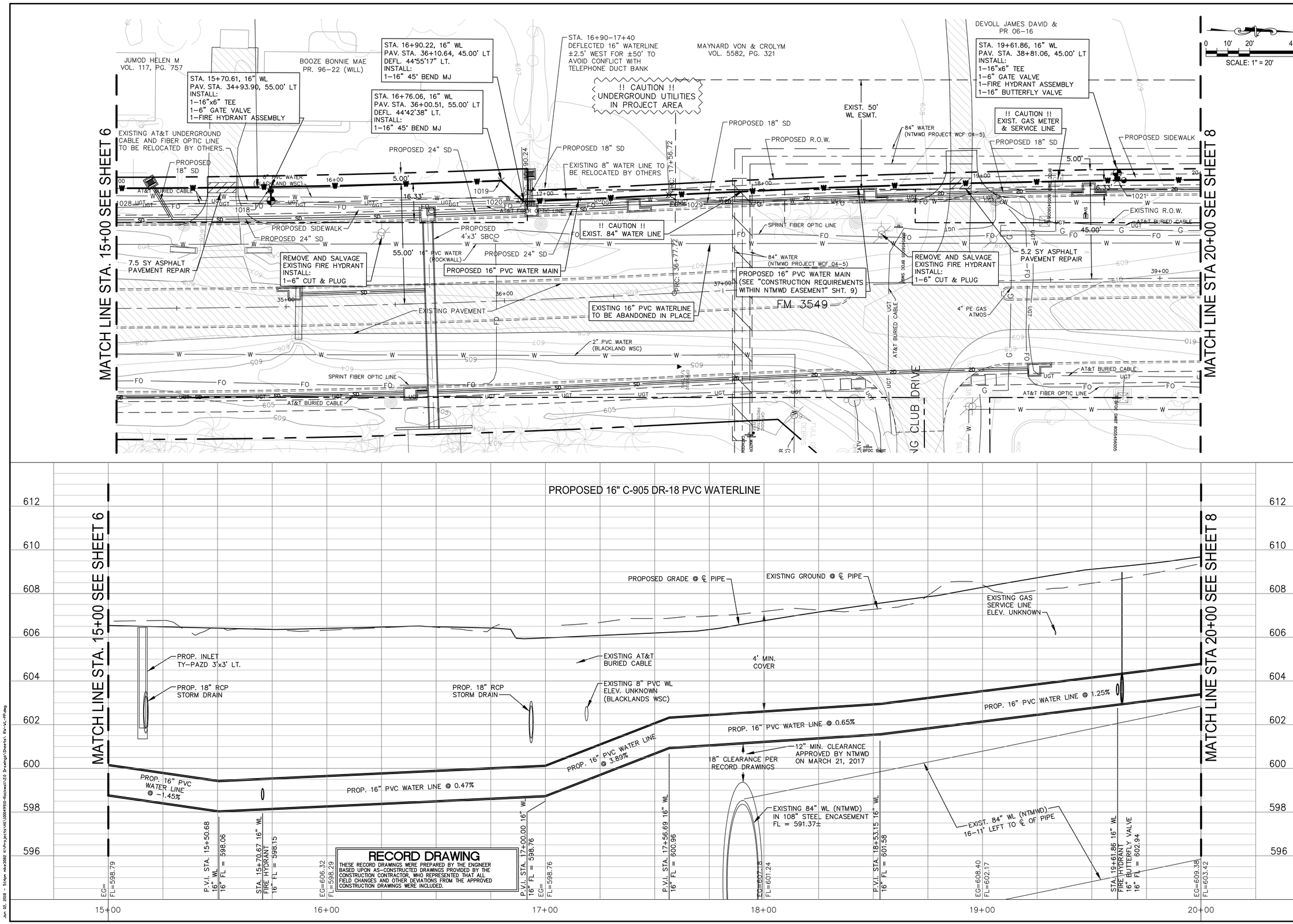

NO.	REVISION	BY	DATE

DESIGNED BY: EJH
DRAWN BY: PMH
CHECKED BY: FCG
APPROVED BY: FCG
DATE: MARCH 22, 2017

ATKINS
18383 PRESTON RD., SUITE 500
DALLAS, TEXAS 75252 - (972) 818-7275
TBPE REG. NO. F-474

STATE OF TEXAS
FRANCISCO C. GUERRERO
85-164
LICENSED
PROFESSIONAL ENGINEER
01/03/2018

F.M. 3549 16" WATERLINE RELOCATION PROJECT

WATER LINE PLAN AND PROFILE STA. 15+00 TO STA. 20+00

SHEET NO. 7 OF 14 SHEETS

FILE NO. RW-WL-PP
PROJECT NO. 100049910

Jan 02, 2018 - 9:14pm mk:2082 K:\Projects\US\100049910-Rockwall\03 Drawings\Sheets\R-WL-PP.dwg

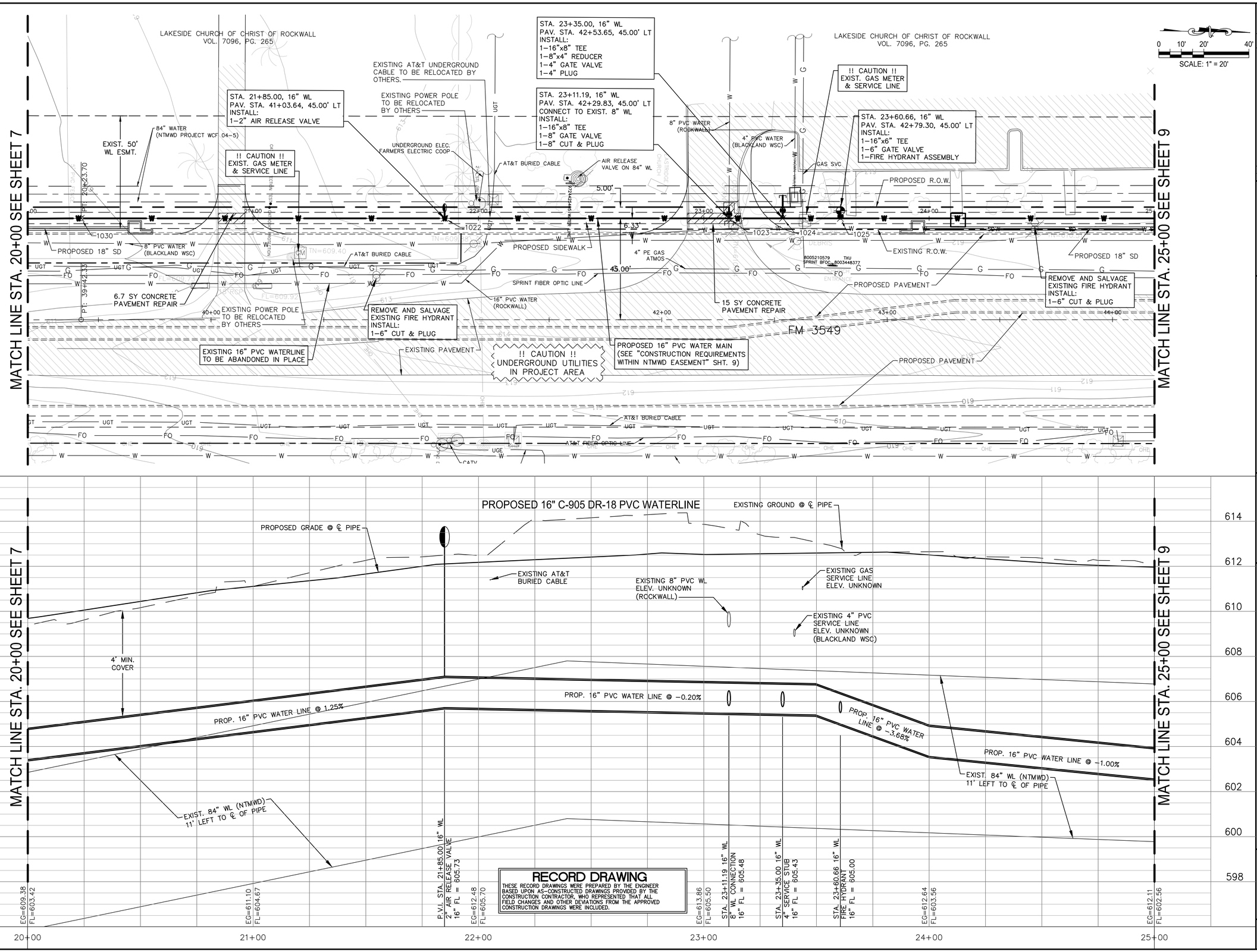

RECORD DRAWING

THESE RECORD DRAWINGS WERE PREPARED BY THE ENGINEER BASED UPON AS-CONSTRUCTED DRAWINGS PROVIDED BY THE CONSTRUCTION CONTRACTOR, WHO REPRESENTED THAT ALL FIELD CHANGES AND OTHER DEVIATIONS FROM THE APPROVED CONSTRUCTION DRAWINGS WERE INCLUDED.

NO.	REVISION	BY	DATE
1	ADDENDUM 1	FCG	7/28/17

DESIGNED BY: EJH
DRAWN BY: PMH
CHECKED BY: FCG
APPROVED BY: FCG
DATE: MARCH 22, 2017

ATKINS
18383 PRESTON RD., SUITE 500
DALLAS, TEXAS 75252 - (972) 818-7275
TBPE REG. NO. F-474

STATE OF TEXAS — FRANCISCO C. GUERRERO — 85484 — LICENSED PROFESSIONAL ENGINEER — 01/03/2018

F.M. 3549 16" WATERLINE RELOCATION PROJECT

WATER LINE PLAN AND PROFILE STA. 20+00 TO STA. 25+00

SHEET NO. 8 OF 14 SHEETS

FILE NO. RW-WL-PP
PROJECT NO. 100049910

Jan 02, 2018 - 9:14am mk:2882 K:\Projects\US\100049910-Rockwall\03 Drawings\Sheets\RW-WL-PP.dwg

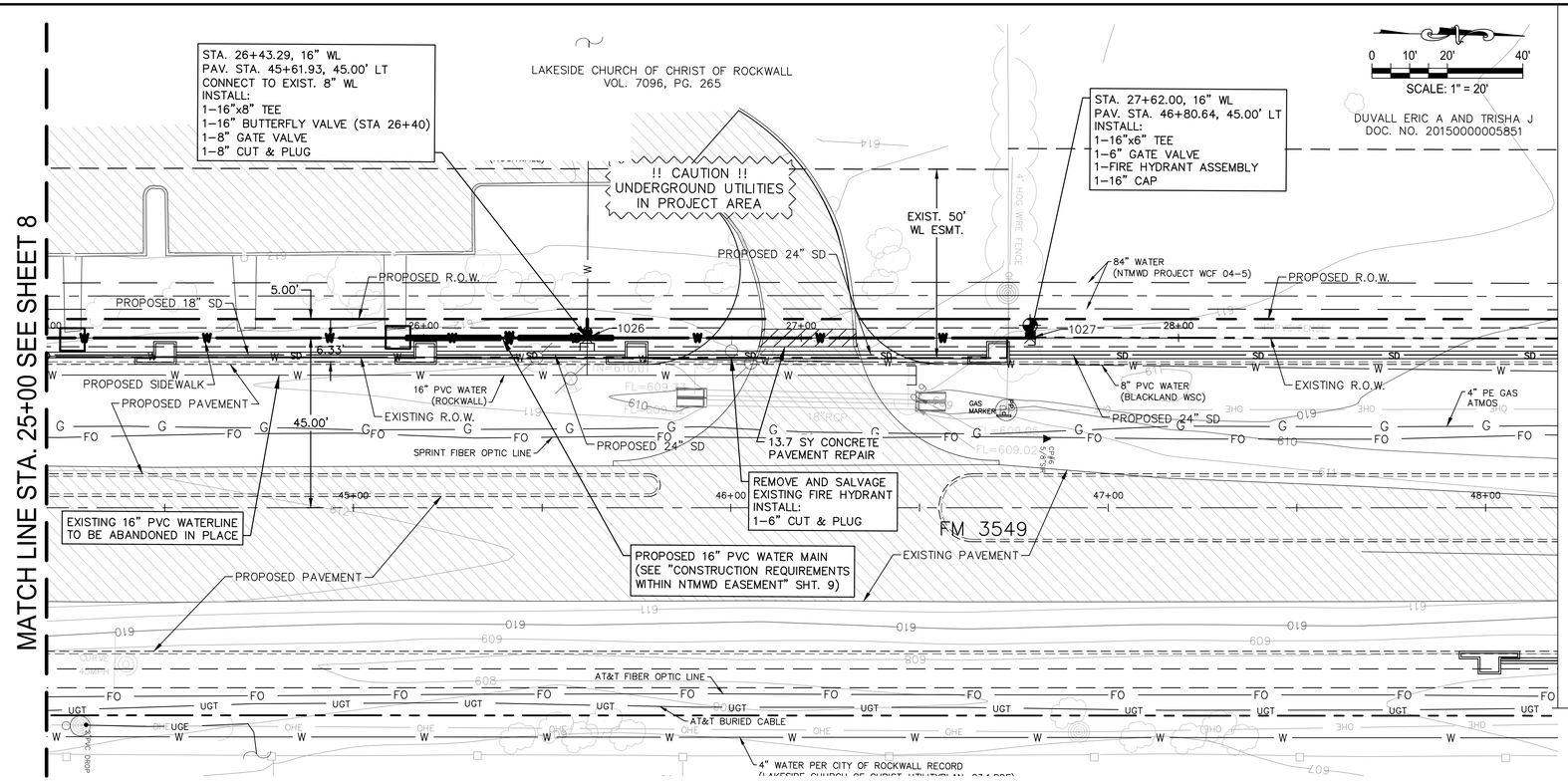

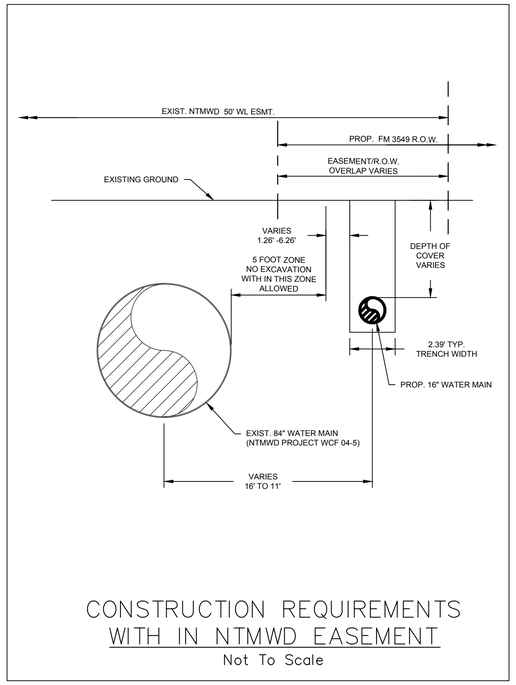

CONSTRUCTION REQUIREMENTS
WITH IN NTMWD EASEMENT
Not To Scale

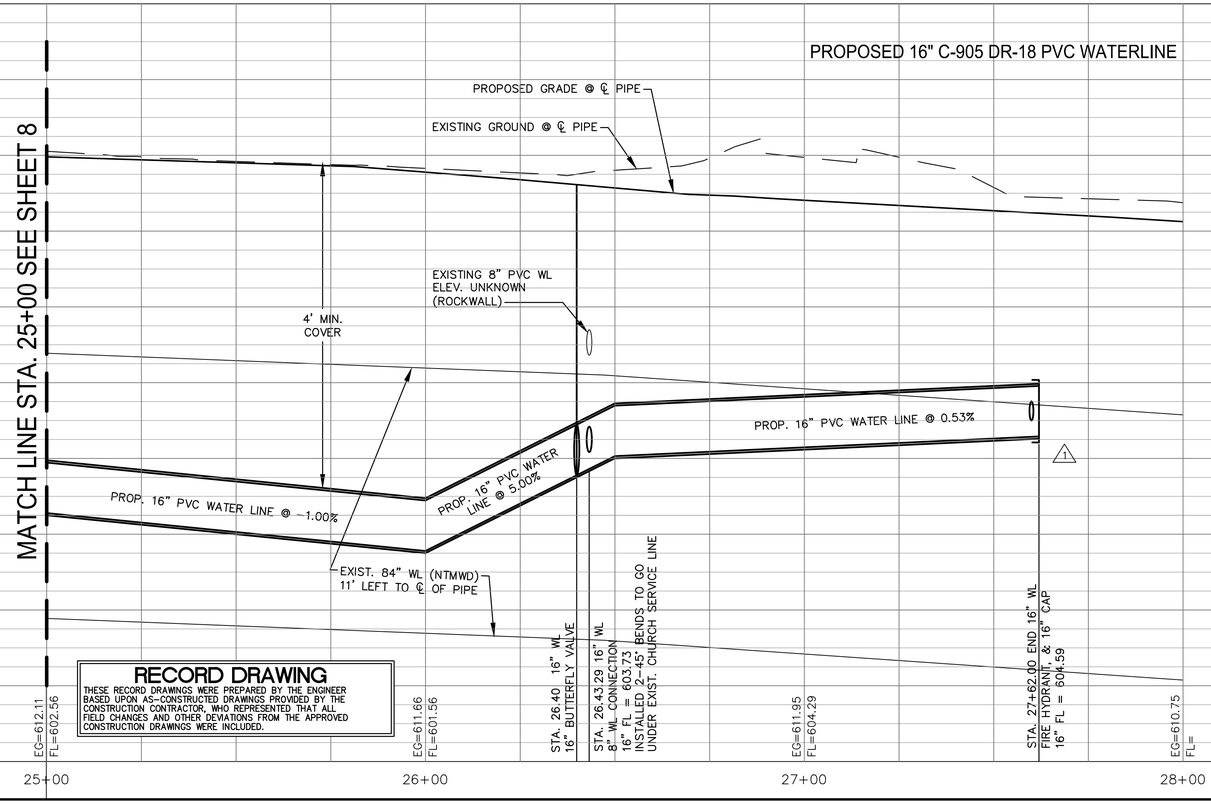

RECORD DRAWING
THESE RECORD DRAWINGS WERE PREPARED BY THE ENGINEER BASED UPON AS-CONSTRUCTED DRAWINGS PROVIDED BY THE CONSTRUCTION CONTRACTOR, WHO REPRESENTED THAT ALL FIELD CHANGES AND OTHER DEVIATIONS FROM THE APPROVED CONSTRUCTION DRAWINGS WERE INCLUDED.

RESTRAINT LENGTH REQUIREMENTS FOR PIPELINE[3]

Station	Fitting Type	Pipe Material	Nominal Size	Bend Angle	Branch Size	Restraint Length[1]
STA.0+75.75 WL	Horizontal Bend	PVC	16	45		21 ft
STA 3+40.00 WL	Tee	PVC	16		6	20 ft
STA. 7+40.00 WL	Tee	PVC	16		6	20 ft
STA. 8+41.06 WL	Horizontal Bend	PVC	16	45		21 ft
STA. 8+55.18 WL	Horizontal Bend	PVC	16	45		21 ft
STA. 8+70.20 WL	Dead End/Valve	PVC	16			142 ft
STA. 10+25.22 WL	Dead End/Valve	PVC	16			142 ft
STA. 10+35.22 WL	Horizontal Bend	PVC	16	45		21 ft
STA. 10+50.73 WL	Horizontal Bend	PVC	16	45		21 ft
STA. 10+61.00 WL	Tee	PVC	16		6	20 ft
STA. 13+03.00 WL	Tee	PVC	16		6	20 ft
STA. 14+40.66 WL	Tee	PVC	16		12	20 ft
STA. 14+40.66 WL	Dead End/Valve	PVC	12			110 ft
STA. 14+40.66 WL	Dead End/Valve	PVC	16			142 ft
STA. 14+40.66 WL	Horizontal Bend	PVC	12	45		17 ft
STA. 14+40.66 WL	Horizontal Bend	PVC	12	45		17 ft
STA. 15+70.61 WL	Tee	PVC	16		6	20 ft
STA. 16+76.06 WL	Horizontal Bend	PVC	16	45		21 ft
STA. 16+90.22 WL	Horizontal Bend	PVC	16	45		21 ft
STA. 19+61.86 WL	Tee	PVC	16		6	20 ft
STA. 19+61.86 WL	Dead End/Valve	PVC	16			142 ft
STA. 23+11.19 WL	Tee	PVC	16		8	20 ft
STA. 23+35.00 WL	Tee	PVC	16		8	20 ft
STA. 23+60.66 WL	Tee	PVC	16		6	20 ft
STA. 26+43.29 WL	Tee	PVC	16		8	20 ft
STA. 26+43.29 WL	Dead End/Valve	PVC	16			142 ft
STA. 27+62.00 WL	Tee	PVC	16		6	20 ft
STA. 27+62.00 WL	Dead End	PVC	16			142 ft

Notes:
1.- Minimum restrained length to either side of the fitting or valve.
2.- All FH assemblies shall be fully restrained from tee to FH barrel.
3.- Assumming a maximum test pressure of 150psi.

NO.	REVISION	BY	DATE
1	ADDENDUM 1	FCG	7/28/17

DESIGNED BY: EJH
DRAWN BY: PMH
CHECKED BY: FCG
APPROVED BY: FCG
DATE: MARCH 22, 2017

ATKINS
18383 PRESTON RD., SUITE 500
DALLAS, TEXAS 75252 - (972) 818-7275
TBPE REG. NO. F-474

TEXAS REGISTERED PROFESSIONAL ENGINEER
FRANCISCO C. GUERRERO
85-484
LICENSED
01/03/2018

F.M. 3549 16" WATERLINE RELOCATION PROJECT
WATER LINE PLAN AND PROFILE
STA. 25+00 TO STA. 28+00

SHEET NO. 9
OF 14 SHEETS

FILE NO. RW-WL-PP
PROJECT NO. 100049910

Jan 02, 2018 - 9:14am mk:2082 K:\Projects\US\100049910-Rockwall\02 Drawings\Sheets\ RW-WL-PP.dwg

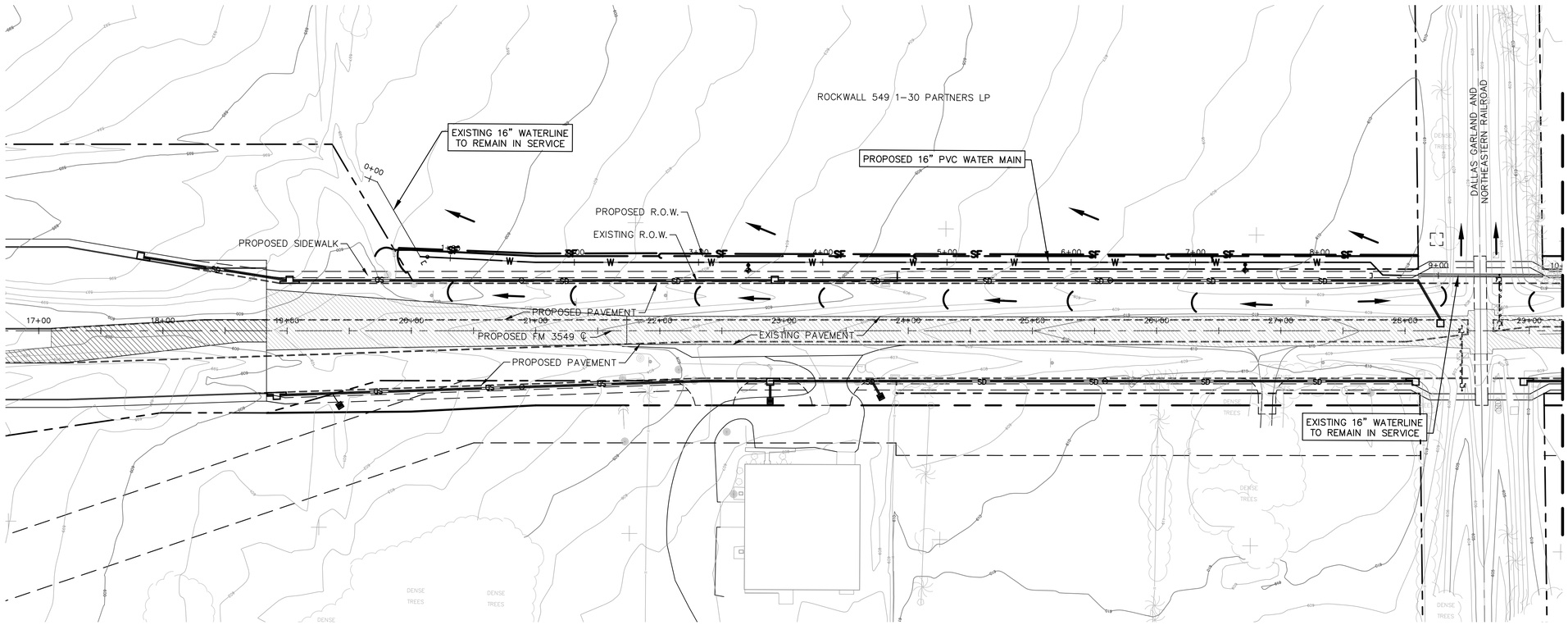

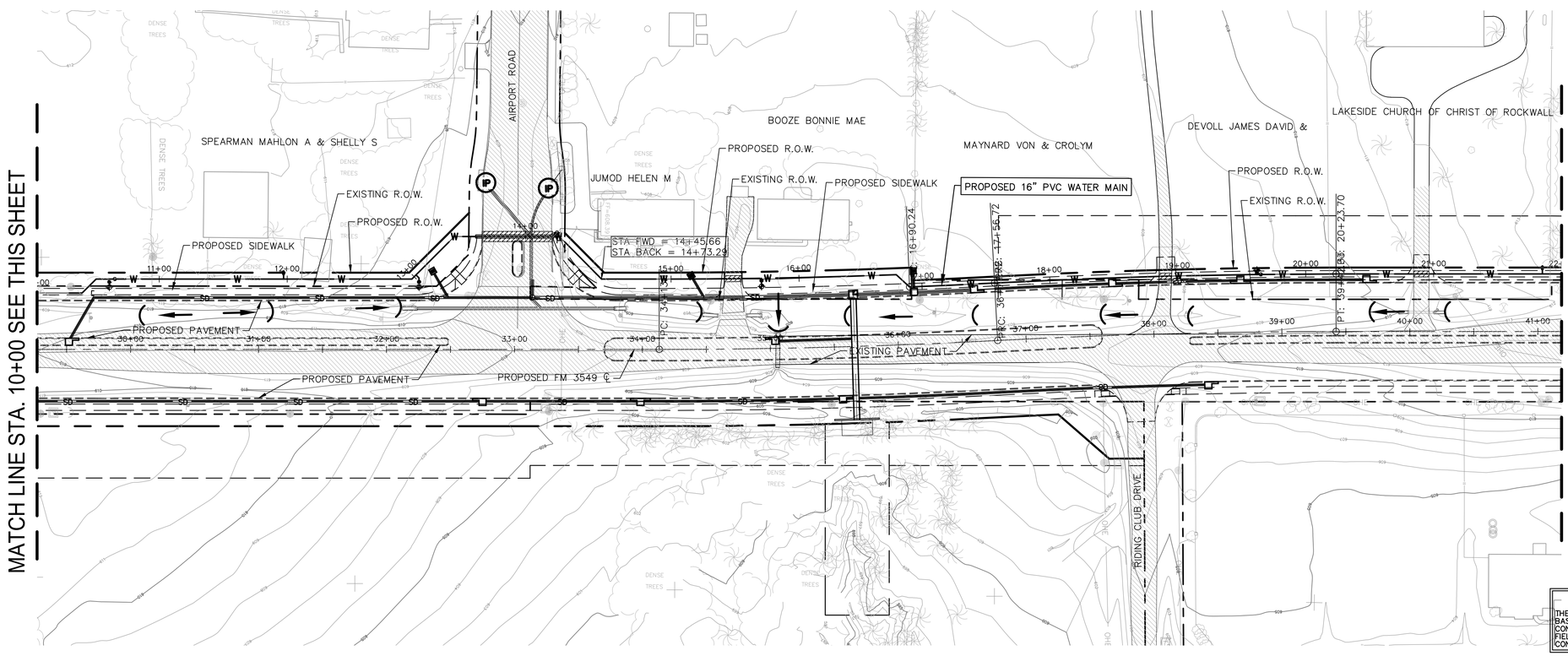

0 25' 50' 100'
SCALE: 1" = 50'

LEGEND

- INLET PROTECTION
- SILT FENCE OR EROSION CONTROL LOGS
- FLOW DIRECTION ARROW

NO.	REVISION	BY	DATE

DESIGNED BY: EJH
DRAWN BY: PMH
CHECKED BY: FCG
APPROVED BY: FCG
DATE: MARCH 22, 2017

ATKINS
18383 PRESTON RD., SUITE 500
DALLAS, TEXAS 75252 - (972) 818-7275
TBPE REG. NO. F-474

STATE OF TEXAS
FRANCISCO C. GUERRERO
86484
LICENSED PROFESSIONAL ENGINEER
01/03/2018

F.M. 3549 16" WATERLINE RELOCATION PROJECT

EROSION CONTROL PLAN
STA. 1+00 TO STA. 22+00

SHEET NO. 10
OF 14 SHEETS

FILE NO. RW-WL-ES
PROJECT NO. 100049910

RECORD DRAWING

THESE RECORD DRAWINGS WERE PREPARED BY THE ENGINEER BASED UPON AS-CONSTRUCTED DRAWINGS PROVIDED BY THE CONSTRUCTION CONTRACTOR, WHO REPRESENTED THAT ALL FIELD CHANGES AND OTHER DEVIATIONS FROM THE APPROVED CONSTRUCTION DRAWINGS WERE INCLUDED.

Jan 02, 2018 - 5:19pm rhe2882 K:\Projects\HN\100049910-Rockwall\CD Drawings\Sheets\ RW-WL-ES.dwg

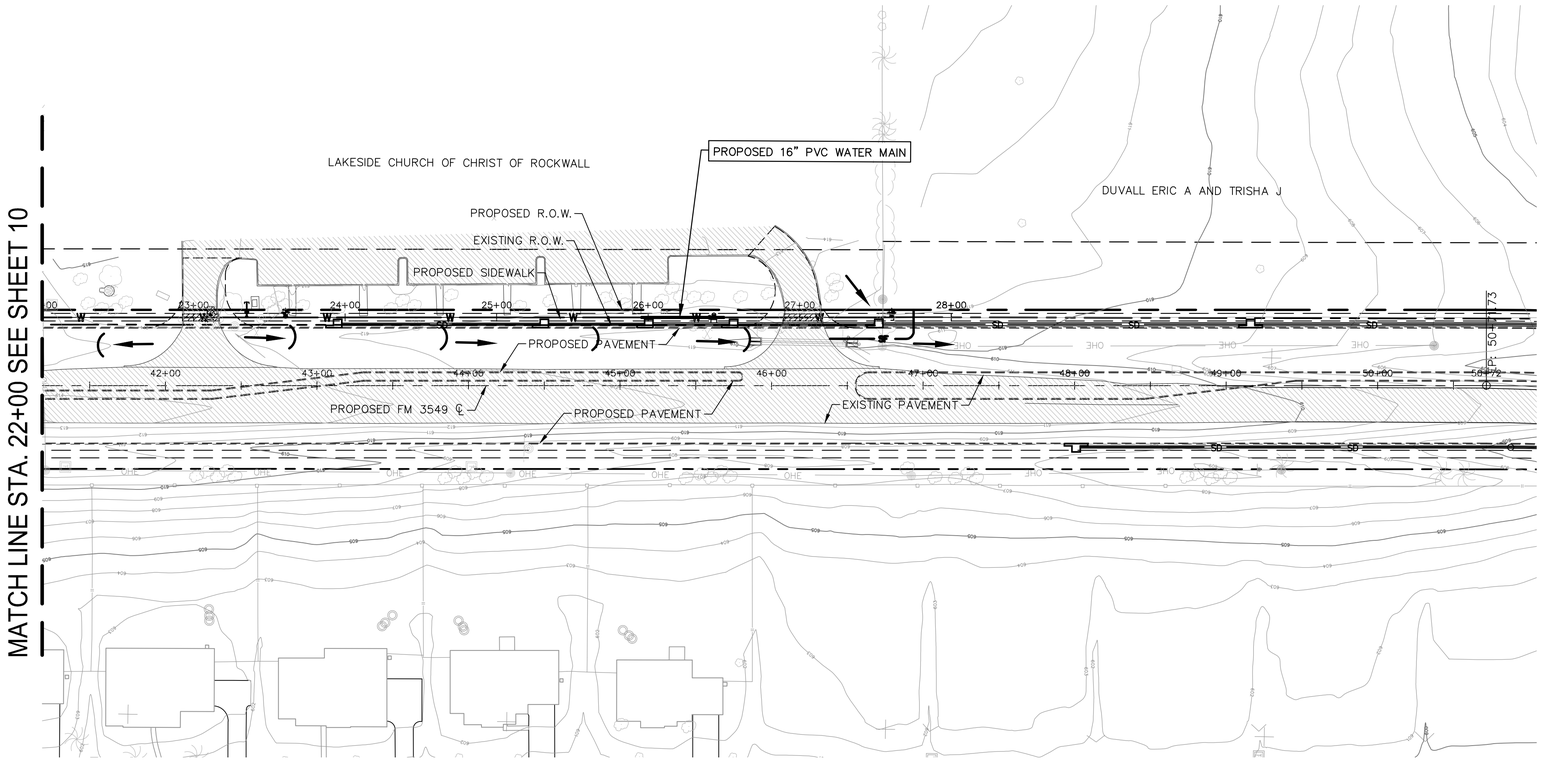

0 25' 50' 100'
SCALE: 1" = 50'

LEGEND

- IP — INLET PROTECTION
- SF — SILT FENCE OR EROSION CONTROL LOGS
- → FLOW DIRECTION ARROW

NO.	REVISION	BY	DATE

DESIGNED BY: EJH
DRAWN BY: PMH
CHECKED BY: FCG
APPROVED BY: FCG
DATE: MARCH 22, 2017

ATKINS
18383 PRESTON RD., SUITE 500
DALLAS, TEXAS 75252 - (972) 818-7275
TBPE REG. NO. F-474

STATE OF TEXAS
FRANCISCO C. GUERRERO
86484
LICENSED
PROFESSIONAL ENGINEER
01/03/2018

F.M. 3549 16" WATERLINE RELOCATION PROJECT

EROSION CONTROL PLAN
STA. 22+00 TO STA. 28+00

SHEET NO. 11
OF 14 SHEETS

FILE NO. RW-WL-ES
PROJECT NO. 100049910

RECORD DRAWING
THESE RECORD DRAWINGS WERE PREPARED BY THE ENGINEER BASED UPON AS-CONSTRUCTED DRAWINGS PROVIDED BY THE CONSTRUCTION CONTRACTOR, WHO REPRESENTED THAT ALL FIELD CHANGES AND OTHER DEVIATIONS FROM THE APPROVED CONSTRUCTION DRAWINGS WERE INCLUDED.

Jan 02, 2018 - 5:59pm rdeo2882 K:\Projects\US\US069990-Rockwall\03 Drawings\Sheets\ RW-WL-ES.dwg

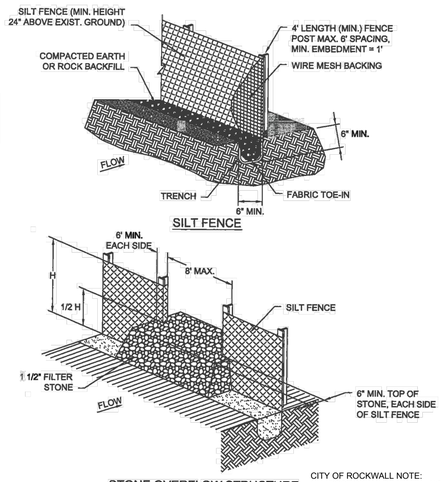

CITY OF ROCKWALL NOTE:
1. POST SHALL BE METAL, NO WOODEN POSTS ALLOWED.

SILT FENCE	North Central Texas Council of Governments	STANDARD SPECIFICATION REFERENCE 201.5	
		DATE OCT. '04	STANDARD DRAWING NO. 1020A

SILT FENCE GENERAL NOTES:

1. POSTS WHICH SUPPORT THE SILT FENCE SHALL BE INSTALLED ON A SLIGHT ANGLE TOWARD THE ANTICIPATED RUNOFF SOURCE. POST MUST BE EMBEDDED A MINIMUM OF ONE FOOT.

2. THE TOE OF THE SILT FENCE SHALL BE TRENCHED IN WITH A SPADE OR MECHANICAL TRENCHER, SO THAT THE DOWNSLOPE FACE OF THE TRENCH IS FLAT AND PERPENDICULAR TO THE LINE OF FLOW. WHERE FENCE CANNOT BE TRENCHED IN (e.g. PAVEMENT), WEIGHT FABRIC FLAP WITH ROCK ON UPHILL SIDE TO PREVENT FLOW FROM SEEPING UNDER FENCE.

3. THE TRENCH MUST BE A MINIMUM OF 6 INCHES DEEP AND 6 INCHES WIDE TO ALLOW FOR THE SILT FENCE FABRIC TO BE LAID IN THE GROUND AND BACKFILLED WITH COMPACTED MATERIAL.

4. SILT FENCE SHOULD BE SECURELY FASTENED TO EACH SUPPORT POST OR TO WIRE BACKING, WHICH IN TURN IS ATTACHED TO THE FENCE POST. THERE SHALL BE A 3 FOOT OVERLAP, SECURELY FASTENED WHERE ENDS OF FABRIC MEET.

5. INSPECTION SHALL BE AS SPECIFIED IN THE SWPPP. REPAIR OR REPLACEMENT SHALL BE MADE PROMPTLY AS NEEDED.

6. SILT FENCE SHALL BE REMOVED WHEN FINAL STABILIZATION IS ACHIEVED OR ANOTHER EROSION OR SEDIMENT CONTROL DEVICE IS EMPLOYED.

7. ACCUMULATED SILT SHALL BE REMOVED WHEN IT REACHES A DEPTH OF HALF THE HEIGHT OF THE FENCE. THE SILT SHALL BE DISPOSED OF AT AN APPROVED SITE AND IN SUCH A MANNER AS TO NOT CONTRIBUTE TO ADDITIONAL SILTATION.

8. STONE OVERFLOW STRUCTURE FILTER STONE SHALL BE WRAPPED IN FILTER FABRIC AND BURIED MINIMUM OF SIX (6) INCHES.

SILT FENCE	North Central Texas Council of Governments	STANDARD SPECIFICATION REFERENCE 201.5	
		DATE OCT. '04	STANDARD DRAWING NO. 1020B

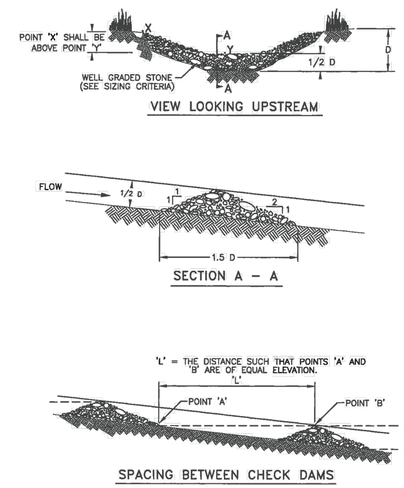

ROCK CHECK DAM	North Central Texas Council of Governments	STANDARD SPECIFICATION REFERENCE 201.9	
		DATE OCT. '04	STANDARD DRAWING NO. 1060A

ROCK CHECK DAM GENERAL NOTES:

1. STONE SHALL BE WELL GRADED WITH SIZE RANGE FROM 1½ TO 3½ INCHES IN DIAMETER DEPENDING ON EXPECTED FLOWS.

2. THE CHECK DAM SHALL BE INSPECTED AS SPECIFIED IN THE SWPPP AND SHALL BE REPLACED WHEN THE STRUCTURE CEASES TO FUNCTION AS INTENDED DUE TO SILT ACCUMULATION AMONG THE ROCKS, WASHOUT, CONSTRUCTION TRAFFIC DAMAGE, ETC.

3. WHEN SILT REACHES A DEPTH EQUAL TO ONE–THIRD OF THE HEIGHT OF THE CHECK DAM OR ONE FOOT, WHICHEVER IS LESS, THE SILT SHALL BE REMOVED AND DISPOSED OF PROPERLY.

4. WHEN THE SITE HAS ACHIEVED FINAL STABILIZATION OR ANOTHER EROSION OR SEDIMENT CONTROL DEVICE IS EMPLOYED, THE CHECK DAM AND ACCUMULATED SILT SHALL BE REMOVED AND DISPOSED OF IN AN APPROVED MANNER.

5. FILTER STONE SHALL BE WRAPPED IN APPROPRIATE SIZED WIRE MESH TO CONTAIN STONE AND BURIED MINIMUM OF SIX (6) INCHES.

ROCK CHECK DAM	North Central Texas Council of Governments	STANDARD SPECIFICATION REFERENCE 201.9	
		DATE OCT. '04	STANDARD DRAWING NO. 1060B

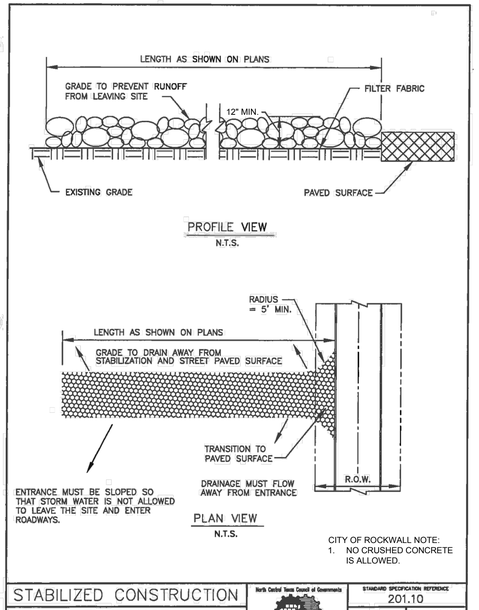

CITY OF ROCKWALL NOTE:
1. NO CRUSHED CONCRETE IS ALLOWED.

STABILIZED CONSTRUCTION ENTRANCE	North Central Texas Council of Governments	STANDARD SPECIFICATION REFERENCE 201.10	
		DATE OCT. '04	STANDARD DRAWING NO. 1070A

STABILIZED CONSTRUCTION ENTRANCE GENERAL NOTES:

1. STONE SHALL BE 4 TO 6 INCH DIAMETER COURSE AGGREGATE. NO CRUSHED CONCRETE WILL BE ALLOWED.

2. MINIMUM LENGTH SHALL BE FIFTY (50) FEET, AND MINIMUM WIDTH SHALL BE TWENTY (20) FEET.

3. THE THICKNESS SHALL NOT BE LESS THAN 12 INCHES.

4. THE WIDTH SHALL BE NO LESS THAN THE FULL WIDTH OF ALL POINTS OF INGRESS OR EGRESS.

5. WHEN NECESSARY, VEHICLES SHALL BE CLEANED TO REMOVE SEDIMENT PRIOR TO ENTRANCE ONTO A PUBLIC ROADWAY. WHEN WASHING IS REQUIRED, IT SHALL BE DONE ON AN AREA STABILIZED WITH CRUSHED STONE WITH DRAINAGE FLOWING AWAY FROM BOTH THE STREET AND THE STABILIZED ENTRANCE. ALL SEDIMENT SHALL BE PREVENTED FROM ENTERING ANY STORM DRAIN, DITCH OR WATERCOURSE USING APPROVED METHODS.

6. THE ENTRANCE SHALL BE MAINTAINED IN A CONDITION WHICH WILL PREVENT TRACKING OR FLOWING OF SEDIMENT ONTO PAVED SURFACES. THIS MAY REQUIRE PERIODIC TOP DRESSING WITH ADDITIONAL STONE AS CONDITIONS DEMAND. ALL SEDIMENT SPILLED, DROPPED, WASHED, OR TRACKED ONTO PAVED SURFACES MUST BE REMOVED IMMEDIATELY.

7. THE ENTRANCE MUST BE PROPERLY GRADED OR INCORPORATE A DRAINAGE SWALE TO PREVENT RUNOFF FROM LEAVING THE CONSTRUCTION SITE.

8. PREVENT SHORTCUTTING OF THE FULL LENGTH OF THE CONSTRUCTION ENTRANCE BY INSTALLING BARRIERS AS NECESSARY.

9. INSPECTION SHALL BE AS SPECIFIED IN THE SWPPP.

10. NO CRUSHED CONCRETE IS ALLOWED.

STABILIZED CONSTRUCTION ENTRANCE	North Central Texas Council of Governments	STANDARD SPECIFICATION REFERENCE 201.11	
		DATE OCT. '04	STANDARD DRAWING NO. 1070B

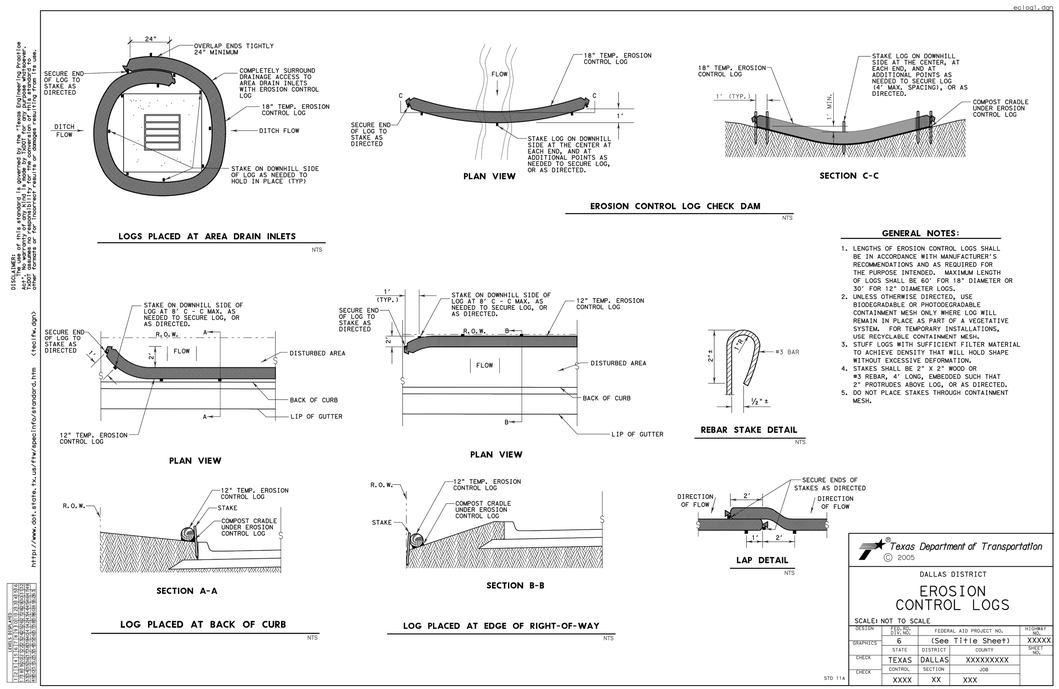

DISCLAIMER:
Each recipient of this document is governed by the "Texas Department of Transportation Agreement for Use of Electronic Transportation Data" and by the "Terms and Conditions" of the "Electronic Transportation Data Transmitted" or other Permanent or for "Incorrect" results or damages resulting from its use.

http://www.dot.state.tx.us/ftw/specinfo/standard.htm (ecltfw.dgn)

GENERAL NOTES:

1. LENGTHS OF EROSION CONTROL LOGS SHALL BE IN ACCORDANCE WITH MANUFACTURER'S RECOMMENDATIONS AND AS REQUIRED FOR THE PURPOSE INTENDED. MAXIMUM LENGTH OF LOGS SHALL BE 60' FOR 18" DIAMETER OR 30' FOR 12" DIAMETER LOGS.
2. UNLESS OTHERWISE DIRECTED, USE BIODEGRADABLE OR PHOTODEGRADABLE CONTAINMENT MESH ONLY WHERE LOG WILL REMAIN IN PLACE AS PART OF A VEGETATIVE SYSTEM. FOR TEMPORARY INSTALLATIONS, USE RECYCLABLE CONTAINMENT MESH.
3. STUFF LOGS WITH SUFFICIENT FILTER MATERIAL TO ACHIEVE DENSITY THAT WILL HOLD SHAPE WITHOUT EXCESSIVE DEFORMATION.
4. STAKES SHALL BE 2" X 2" WOOD OR #3 REBAR, 4' LONG, EMBEDDED SUCH THAT 2" PROTRUDES ABOVE LOG, OR AS DIRECTED.
5. DO NOT PLACE STAKES THROUGH CONTAINMENT MESH.

NO.	REVISION	BY	DATE

DESIGNED BY: EJH
DRAWN BY: PMH
CHECKED BY: FCG
APPROVED BY: FCG
DATE: MARCH 22, 2017

ATKINS
18383 PRESTON RD., SUITE 500
DALLAS, TEXAS 75252 - (972) 818-7275
TBPE REG. NO. F-474

TEXAS LICENSED PROFESSIONAL ENGINEER FRANCISCO C. GUERRERO 85461 01/03/2018

F.M. 3549 16" WATERLINE RELOCATION PROJECT

EROSION SEDIMENTATION CONTROL DETAILS

SHEET NO. 12 OF 14 SHEETS

FILE NO. RW-WL-DETAILS
PROJECT NO. 100049910

RECORD DRAWING

THESE RECORD DRAWINGS WERE PREPARED BY THE ENGINEER BASED UPON AS-CONSTRUCTED DRAWINGS PROVIDED BY THE CONSTRUCTION CONTRACTOR, WHO REPRESENTED THAT ALL FIELD CHANGES AND OTHER DEVIATIONS FROM THE APPROVED CONSTRUCTION DRAWINGS WERE INCLUDED.

Jan 02, 2018 - 5:06pm rex2082 K:\Projects\WL\100049910-Rockwall\20 Drawings\Sheets\RW-WL-DETAILS.dwg

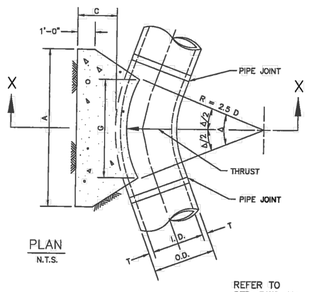

PLAN
N.T.S.

REFER TO
STD. DWG. No. 4040
FOR GENERAL NOTES.

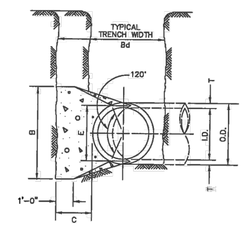

SECTION X–X
N.T.S.

HORIZONTAL THRUST BLOCK
AT PIPE BEND

North Central Texas Council of Governments

STANDARD SPECIFICATION REFERENCE 502.4
DATE OCT. '04
STANDARD DRAWING NO. 4010A

I.D. (IN.)	T (IN.)	Δ = 11.25° C (FT.)	Δ = 22.50° C (FT.)	E (FT.)
4,6,8	0.4	1.5	1.5	0.9
10,12	0.5	1.5	1.5	1.2
16,18	0.6	1.5	1.5	1.8
20	0.7	1.5	1.5	1.8
24	0.9	1.5	1.5	2.1
30	2.9	1.5	1.9	2.6
36	4.5	1.5	2.3	3.3
42	5.0	1.8	2.6	3.8
48	5.5	2.0	3.0	4.3
54	6.0	2.3	3.4	4.8
60	6.5	2.5	3.8	5.3
66	6.8	2.8	4.1	5.7
72	7.5	3.0	4.5	6.3
78	7.5	3.3	4.9	6.7
84	8.0	3.5	5.3	7.2
90	8.5	3.8	5.6	7.7
96	9.0	4.0	6.0	8.2

I.D. (IN.)	Δ = 11.25°									I.D. (IN.)	Δ = 22.50°								
			EARTH			ROCK							EARTH			ROCK			
	G (FT.)	THRUST (TONS)	A (FT.)	B (FT.)	VOL. (C.Y.)	A (FT.)	B (FT.)	VOL. (C.Y.)			G (FT.)	THRUST (TONS)	A (FT.)	B (FT.)	VOL. (C.Y.)	A (FT.)	B (FT.)	VOL. (C.Y.)	
4,6,8	0.4	1.0	1.0	1.5	0.1	1.0	1.0	0.1	4,6,8	4,6,8	0.8	2.0	1.5	1.5	0.1	1.0	1.0	0.1	4,6,8
10,12	0.6	2.2	1.5	1.5	0.1	1.0	1.5	0.1	10,12	10,12	1.1	4.4	2.0	2.5	0.3	1.5	1.5	0.1	10,12
16,18	0.8	5.0	2.0	2.5	0.3	1.5	2.0	0.2	16,18	16,18	1.6	9.9	3.0	3.5	0.6	2.0	2.5	0.3	16,18
20	0.9	6.2	2.0	3.5	0.4	1.5	3.0	0.3	20	20	1.8	12.3	3.5	3.5	0.7	2.0	3.0	0.4	20
24	1.1	8.9	3.0	3.5	0.5	1.5	3.0	0.3	24	24	2.2	17.7	4.0	4.5	1.0	3.0	3.5	0.5	24
30	1.4	10.4	3.0	3.5	0.6	2.0	3.5	0.4	30	30	2.7	20.7	5.0	4.5	1.5	3.0	4.0	0.6	30
36	1.7	15.0	3.5	4.5	0.9	2.0	4.0	0.5	36	36	3.3	29.8	5.5	5.5	2.3	4.0	4.0	1.3	36
42	1.9	20.4	4.5	5.0	1.5	2.5	5.0	0.8	42	42	3.8	40.5	7.0	6.0	3.9	4.5	5.0	2.1	42
48	2.2	26.9	4.5	6.0	2.0	2.5	6.0	1.1	48	48	4.4	52.9	8.0	7.0	5.7	4.5	6.0	2.8	48
54	2.5	33.7	6.0	6.0	3.0	3.0	6.0	1.4	54	54	4.9	67.0	9.0	8.0	8.0	6.0	6.0	4.1	54
60	2.7	41.6	6.0	7.0	3.8	3.0	7.0	1.8	60	60	5.5	82.7	9.5	9.0	10.6	6.0	7.0	5.3	60
66	3.0	50.3	6.5	8.0	5.1	3.5	8.0	2.7	66	66	6.0	100.1	10.5	10.0	14.1	6.5	8.0	7.2	66
72	3.3	59.9	7.5	8.0	6.3	4.0	8.0	3.3	72	72	6.6	119.1	11.0	11.0	17.6	7.5	8.0	9.1	72
78	3.6	70.2	8.0	9.0	8.1	4.0	9.0	3.9	78	78	7.1	139.8	12.0	12.0	22.5	8.0	9.0	11.7	78
84	3.8	81.5	8.5	10.0	10.3	4.5	10.0	5.3	84	84	7.6	162.1	13.0	12.5	27.2	8.5	10.0	14.6	84
90	4.1	93.5	9.5	10.0	12.9	5.0	10.0	6.3	90	90	8.2	186.1	14.0	13.5	33.7	9.5	10.0	17.7	90
96	4.4	106.4	10.0	11.0	15.0	5.0	11.0	7.4	96	96	8.7	211.7	15.0	14.5	41.2	10.0	11.0	21.8	96

TABLES OF DIMENSIONS AND QUANTITIES

HORIZONTAL THRUST BLOCK
AT PIPE BEND

North Central Texas Council of Governments

STANDARD SPECIFICATION REFERENCE 502.4
DATE OCT. '04
STANDARD DRAWING NO. 4010B

I.D. (IN.)	Δ = 30°									I.D. (IN.)	Δ = 45°								
			EARTH			ROCK							EARTH			ROCK			
	G (FT.)	THRUST (TONS)	A (FT.)	B (FT.)	VOL. (C.Y.)	A (FT.)	B (FT.)	VOL. (C.Y.)			G (FT.)	THRUST (TONS)	A (FT.)	B (FT.)	VOL. (C.Y.)	A (FT.)	B (FT.)	VOL. (C.Y.)	
4,6,8	1.0	2.6	2.0	1.5	0.2	1.0	1.5	0.1	4,6,8	4,6,8	1.5	3.9	2.0	2.0	0.2	1.5	1.5	0.1	4,6,8
10,12	1.5	5.9	2.5	2.5	0.3	2.0	1.5	0.2	10,12	10,12	2.2	8.7	3.5	2.5	0.5	2.0	2.5	0.3	10,12
16,18	2.2	13.2	3.5	4.0	0.8	2.5	3.0	0.4	16,18	16,18	3.2	19.5	4.5	4.5	1.2	3.0	3.5	0.6	16,18
20	2.4	16.3	4.5	4.0	1.0	3.0	3.0	0.5	20	20	3.6	24.1	5.5	4.5	1.5	3.5	3.5	0.7	20
24	2.9	23.4	6.0	4.0	1.4	3.5	3.5	0.7	24	24	4.3	34.6	8.0	4.5	2.3	4.5	4.0	1.1	24
30	3.6	27.5	6.5	5.0	1.9	3.5	4.0	0.9	30	30	5.4	40.6	8.5	5.0	3.2	5.5	4.0	1.6	30
36	4.4	39.5	7.0	6.0	3.4	4.5	4.5	1.6	36	36	6.5	58.5	10.0	6.0	5.3	6.5	4.5	2.6	36
42	5.1	53.8	8.0	7.0	5.1	5.5	5.0	2.5	42	42	7.5	79.6	11.5	7.0	8.1	8.0	5.0	4.2	42
48	5.8	70.3	9.0	8.0	7.4	6.0	6.0	3.7	48	48	8.6	104.0	13.0	8.0	11.9	9.0	6.0	6.3	48
54	6.5	89.0	10.0	9.0	10.3	7.0	6.5	5.3	54	54	9.7	131.5	15.0	9.0	17.1	10.5	6.5	8.9	54
60	7.3	110.0	11.0	10.0	13.9	7.5	7.5	7.3	60	60	10.7	162.4	16.5	10.0	23.1	11.0	7.5	12.0	60
66	8.0	132.9	12.5	11.0	18.9	8.5	8.0	9.6	66	66	11.8	196.5	18.0	11.0	30.1	12.0	8.5	16.2	66
72	8.7	158.2	13.5	12.0	24.0	9.0	9.0	12.3	72	72	12.9	233.9	19.5	12.0	38.6	14.0	8.5	20.7	72
78	9.4	185.6	14.5	13.0	30.0	10.0	9.5	15.6	78	78	13.9	274.5	21.5	13.0	49.8	14.5	9.5	25.9	78
84	10.1	215.3	15.5	14.0	37.1	10.5	10.5	19.5	84	84	15.0	318.4	23.0	14.0	61.2	15.5	10.5	32.6	84
90	10.9	247.1	16.5	15.0	45.0	11.5	11.0	23.9	90	90	16.1	365.5	24.5	15.0	74.5	17.5	10.5	39.6	90
96	11.6	281.2	18.0	16.0	55.5	12.5	11.5	28.9	96	96	17.1	415.6	26.0	16.0	89.5	18.5	11.5	48.5	96

I.D. (IN.)	Δ = 67.50°									I.D. (IN.)	Δ = 90°								
			EARTH			ROCK							EARTH			ROCK			
	G (FT.)	THRUST (TONS)	A (FT.)	B (FT.)	VOL. (C.Y.)	A (FT.)	B (FT.)	VOL. (C.Y.)			G (FT.)	THRUST (TONS)	A (FT.)	B (FT.)	VOL. (C.Y.)	A (FT.)	B (FT.)	VOL. (C.Y.)	
4,6,8	2.1	5.6	3.0	2.0	0.3	2.0	1.5	0.2	4,6,8	4,6,8	2.7	7.1	5.0	1.5	0.4	2.0	2.0	0.2	4,6,8
10,12	3.1	12.6	5.5	2.5	0.8	3.5	2.0	0.4	10,12	10,12	4.0	16.0	6.5	2.5	1.0	3.5	2.5	0.5	10,12
16,18	4.7	28.3	7.5	4.0	1.9	5.5	3.0	0.9	16,18	16,18	6.0	36.0	9.0	4.0	2.4	4.5	4.0	1.0	16,18
20	5.2	34.9	9.0	4.0	2.3	5.5	3.5	1.2	20	20	6.6	44.4	10.0	4.5	3.1	6.0	4.0	1.5	20
24	6.2	50.3	11.5	4.5	3.5	6.5	4.0	1.6	24	24	7.9	64.0	14.5	4.5	5.0	8.0	4.0	2.1	24
30	7.8	58.9	12.0	5.0	4.8	7.5	4.0	2.2	30	30	9.9	75.0	15.0	5.0	6.7	10.0	4.0	3.3	30
36	9.4	84.9	14.5	6.0	8.2	9.5	4.5	3.8	36	36	11.9	108.0	18.0	6.0	11.4	12.0	4.5	5.3	36
42	10.9	115.5	17.0	7.0	12.8	11.0	5.5	6.3	42	42	13.9	147.0	21.0	7.0	17.8	14.0	5.5	8.7	42
48	12.5	150.9	19.0	8.0	18.4	13.0	6.0	9.2	48	48	15.9	192.0	24.0	8.0	25.2	16.0	6.0	12.4	48
54	14.0	191.0	21.5	9.0	26.0	15.0	6.5	12.9	54	54	17.9	243.0	27.0	9.0	36.9	18.0	7.0	18.1	54
60	15.6	235.8	24.0	10.0	35.6	16.0	7.5	17.6	60	60	19.9	299.8	30.0	10.0	50.3	20.0	7.5	24.0	60
66	17.1	285.3	26.0	11.0	46.0	18.0	8.0	23.0	66	66	21.8	362.8	33.0	11.0	66.2	22.0	8.5	32.5	66
72	18.7	339.5	28.5	12.0	57.8	19.0	9.0	28.4	72	72	23.8	431.8	36.0	12.0	85.6	24.0	9.0	41.0	72
78	20.2	398.5	31.0	13.0	75.7	21.0	9.5	37.4	78	78	25.7	506.7	39.0	13.0	109.2	26.0	10.0	53.2	78
84	21.8	462.1	33.5	14.0	94.7	22.0	10.5	46.5	84	84	27.7	587.7	42.0	14.0	134.4	28.0	10.5	64.8	84
90	23.3	530.5	35.5	15.0	114.4	24.5	11.0	58.2	90	90	29.0	674.6	45.0	15.0	164.9	30.0	11.5	81.2	90
96	24.9	603.6	38.0	16.0	138.9	25.5	12.0	70.0	96	96	31.6	767.5	48.0	16.0	199.0	32.0	12.0	95.1	96

TABLES OF DIMENSIONS AND QUANTITIES

HORIZONTAL THRUST BLOCK
AT PIPE BEND

North Central Texas Council of Governments

STANDARD SPECIFICATION REFERENCE 502.4
DATE OCT. '04
STANDARD DRAWING NO. 4010C

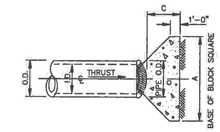

PLAN OF PLUG THRUST BLOCK
N.T.S.

REFER TO
STD. DWG. No. 4040
FOR GENERAL NOTES.

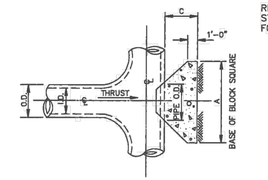

PLAN OF TEE THRUST BLOCK
N.T.S.

I.D. (IN.)	THRUST (TONS)	C (FT.)	EARTH A (FT.)	EARTH VOL. (C.Y.)	ROCK A (FT.)	ROCK VOL. (C.Y.)
4,6,8	5.1	1.5	2.5	0.3	2.0	0.2
10,12	11.3	1.5	3.5	0.6	2.5	0.3
16,18	25.5	2.0	5.5	1.8	4.0	0.9
20	31.5	2.0	6.0	1.9	4.0	0.9
24	45.2	2.5	7.0	3.1	5.0	1.7
30	63.0	3.0	7.5	4.1	5.5	2.4
36	76.3	4.0	9.0	7.3	6.5	4.2
42	104.0	4.5	10.5	11.0	7.5	6.2
48	136.0	5.0	12.0	15.6	8.5	8.7
54	172.0	5.5	13.5	21.4	9.5	11.9
60	212.0	6.0	15.0	28.4	10.5	15.7
66	257.0	6.5	16.5	36.8	11.5	20.5
72	305.0	7.5	17.5	47.2	12.5	27.2
78	358.0	8.0	19.0	58.9	13.5	33.7
84	419.0	8.5	20.0	72.3	14.5	41.9
90	477.0	9.0	22.0	87.7	15.5	49.7
96	543.0	9.5	23.5	104.8	16.5	61.0

HORIZONTAL THRUST BLOCK
AT TEES AND PLUGS

North Central Texas Council of Governments

STANDARD SPECIFICATION REFERENCE 502.4
DATE OCT. '04
STANDARD DRAWING NO. 4020

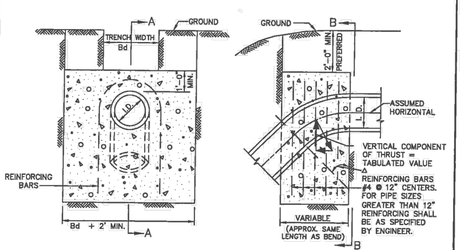

ELEVATION "B–B"
N.T.S.

SECTION "A–A"
N.T.S.

REFER TO
STD. DWG. No. 4040
FOR GENERAL NOTES.

Δ	11.25°		22.50°		30°		45°		67.50°		90°		Δ
I.D. (IN.)	THRUST (TONS)	VOL. (C.Y.)	THRUST (TONS)	VOL. (C.Y.)	THIRUST (TONS)	VOL. (C.Y.)	THRUST (TONS)	VOL. (C.Y.)	THRUST (TONS)	VOL. (C.Y.)	THRUST (TONS)	VOL. (C.Y.)	I.D. (IN.)
4,6,8	1.0	0.5	2.0	1.0	2.5	1.3	3.6	1.8	4.6	2.3	5.0	2.5	4,6,8
10,12	2.2	1.1	4.3	2.2	5.7	2.8	8.0	4.0	10.5	5.2	11.3	5.7	10,12
16,18	5.0	2.5	9.7	4.9	12.7	6.4	18.0	9.0	23.5	11.8	25.5	12.7	16,18
20	6.1	3.1	12.0	6.0	15.7	7.9	22.2	11.1	29.2	14.5	31.4	15.7	20
24	8.2	4.4	17.3	8.7	22.6	11.3	32.0	16.0	41.8	20.9	45.2	22.6	24
30	10.5	5.2	20.3	10.1	26.5	13.3	37.5	18.8	49.0	24.5	53.1	26.5	30
36	14.9	7.5	29.2	14.6	38.2	19.1	54.0	27.0	70.5	35.3	76.4	38.2	36
42	20.3	10.1	39.8	19.9	52.0	26.0	73.5	36.7	96.0	48.0	104.0	52.0	42
48	26.5	13.2	51.9	26.0	67.9	33.9	96.0	48.0	126.0	62.7	136.0	67.9	48
54	33.5	16.8	65.7	32.9	85.9	42.9	122.0	60.7	159.0	79.4	172.0	85.9	54
60	41.4	20.7	81.2	40.6	106.0	53.0	150.0	75.0	196.0	98.0	212.0	106.0	60
66	50.1	25.0	98.2	49.1	128.0	64.2	182.0	90.7	237.0	119.0	257.0	128.0	66
72	59.6	29.8	117.0	58.4	153.0	76.3	216.0	108.0	282.0	141.0	305.0	153.0	72
78	69.9	35.0	137.0	68.6	179.0	90.0	254.0	127.0	331.0	166.0	358.0	179.0	78
84	81.1	40.5	159.0	79.5	208.0	104.0	294.0	147.0	384.0	192.0	416.0	208.0	84
90	93.1	46.5	183.0	91.3	239.0	119.0	337.0	169.0	441.0	221.0	477.0	239.0	90
96	106.0	53.0	208.0	104.0	272.0	135.0	384.0	192.0	502.0	251.0	543.0	272.0	96

VERTICAL THRUST BLOCK
AT PIPE BEND

North Central Texas Council of Governments

STANDARD SPECIFICATION REFERENCE 502.4
DATE OCT. '04
STANDARD DRAWING NO. 4030

GENERAL NOTES FOR ALL THRUST BLOCKS:

1. CONCRETE FOR BLOCKING SHALL BE CLASS "B".
2. ALL CALCULATIONS ARE BASED ON INTERNAL PRESSURE OF 200 PSI FOR DUCTILE IRON, P.V.C., AND 150 PSI FOR CONCRETE PIPE.
3. VOLUMES OF THRUST BLOCKS ARE NET VOLUMES OF CONCRETE TO BE FURNISHED. THE CORRESPONDING WEIGHT OF THE CONCRETE (CLASS "B") IS EQUAL TO OR GREATER THAN THE VERTICAL COMPONENT OF THE THRUST ON THE VERTICAL BEND.
4. WALL THICKNESS (T) ASSUMED HERE FOR ESTIMATING PURPOSES ONLY.
5. POUR CONCRETE FOR BLOCK AGAINST UNDISTURBED EARTH.
6. DIMENSIONS MAY BE VARIED AS REQUIRED BY FIELD CONDITIONS WHERE AND AS DIRECTED BY THE ENGINEER. THE VOLUME OF CONCRETE BLOCKING SHALL NOT BE LESS THAN SHOWN HERE.
7. THE SOIL BEARING PRESSURES ARE BASED ON 1000 LBS./S.F. IN SOIL AND 2000 LBS./S.F. IN ROCK.
8. USE POLYETHYLENE WRAP OR EQUAL BETWEEN CONCRETE AND BEND, TEE, OR PLUG TO PREVENT THE CONCRETE FROM STICKING TO IT.
9. CONCRETE SHALL NOT EXTEND BEYOND JOINTS.

THRUST BLOCK
GENERAL NOTES

North Central Texas Council of Governments

STANDARD SPECIFICATION REFERENCE 502.4
DATE OCT. '04
STANDARD DRAWING NO. 4040

NOTE:
IN UNPAVED AREAS, INSTALL 2' x 2' x 6" CONCRETE VALVE PAD FLUSH WITH THE TOP OF VALVE BOX. REINFORCE WITH #3 BARS ON 6" CENTERS BOTH WAYS.

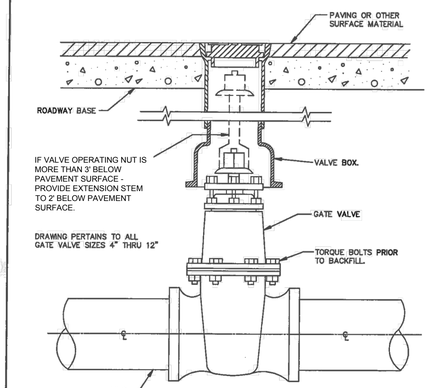

GATE VALVE BOX AND
EXTENSION STEM
N.T.S.

GATE VALVE 4" TO 12"
BOX & EXTENSION STEM

North Central Texas Council of Governments

STANDARD SPECIFICATION REFERENCE 502.6
DATE OCT. '04
STANDARD DRAWING NO. 4050

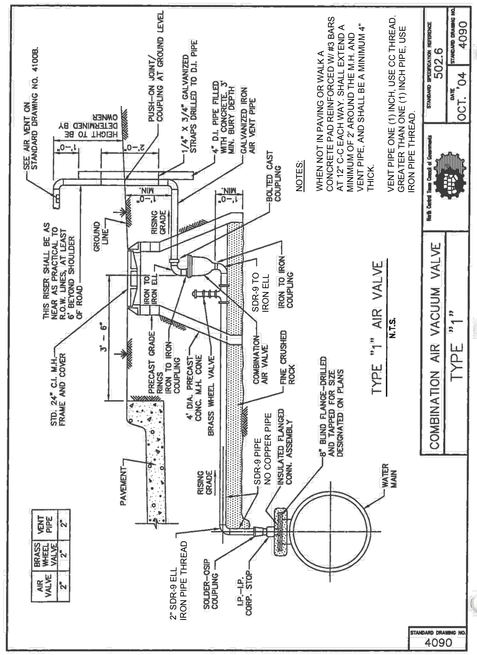

COMBINATION AIR VACUUM VALVE
TYPE "1"

North Central Texas Council of Governments

STANDARD SPECIFICATION REFERENCE 502.6
DATE OCT. '04
STANDARD DRAWING NO. 4090

RECORD DRAWING
THESE RECORD DRAWINGS WERE PREPARED BY THE ENGINEER BASED UPON AS-CONSTRUCTED DRAWINGS PROVIDED BY THE CONSTRUCTION CONTRACTOR, WHO REPRESENTED THAT ALL FIELD CHANGES AND OTHER DEVIATIONS FROM THE APPROVED CONSTRUCTION DRAWINGS WERE INCLUDED.

NO.	REVISION	BY	DATE

DESIGNED BY: EJH
DRAWN BY: PMH
CHECKED BY: FCG
APPROVED BY: FCG
DATE: MARCH 22, 2017

ATKINS
18383 PRESTON RD., SUITE 500
DALLAS, TEXAS 75252 - (972) 818-7275
TBPE REG. NO. F-474

TEXAS REGISTERED PROFESSIONAL ENGINEER FRANCISCO C. GUERRERO 85461 LICENSED 07/03/2018

F.M. 3549 16" WATERLINE RELOCATION PROJECT

WATER LINE DETAILS 1

SHEET NO. 13 OF 14 SHEETS

FILE NO. RW-WL-DETAILS
PROJECT NO. 100049910

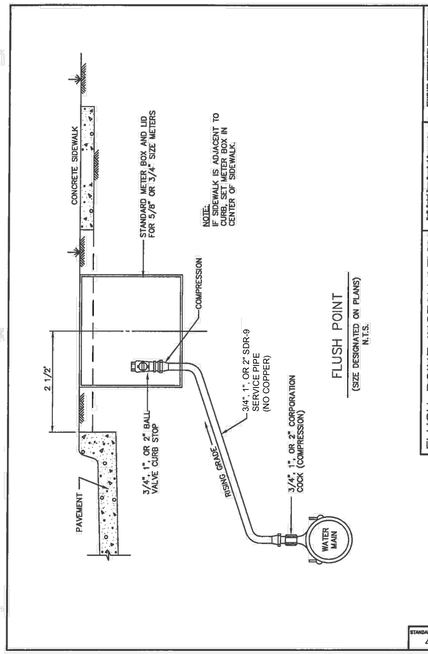

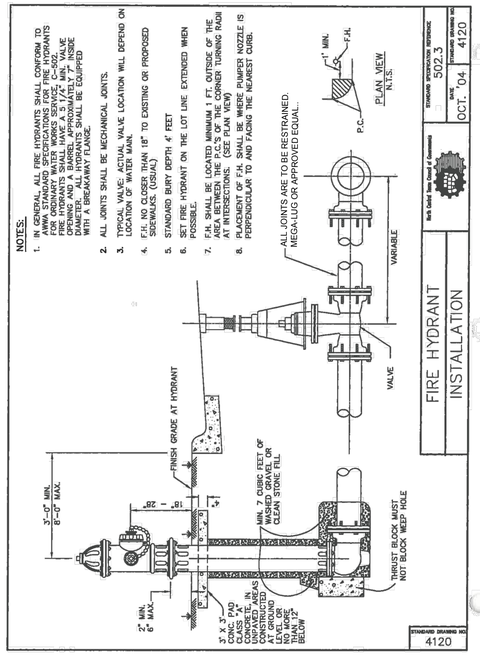

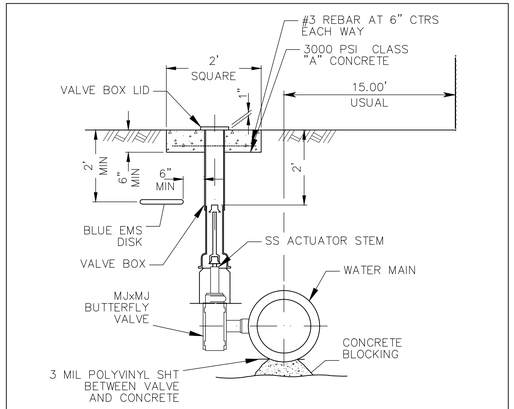

NOTES:

1. IF VALVE OPERATING NUT IS MORE THAN 3' BELOW PAVEMENT SURFACE, PROVIDE EXTENSION STEM TO 2'BELOW PAVEMENT SURFACE.
2. ALL JOINTS ARE TO BE RESTRAINED. MEGA-LUG OR APPROVED EQUAL.
3. STA AND O/S AS SHOWN ON THE PLANS IS TO THE CENTERLINE OF THE WATER MAIN.
4. BUTTERFLY VALVE SHALL CONFORM STRICTLY TO AWWA C504 FOR SHORT BODY CLASS 150B.
5. MECHANICAL JOINTS SHALL CONFORM STRICTLY TO AWWA C110 FOR MIN 250 PSIG WORKING PRESSURE.

BUTTERFLY VALVE INSTALLATION AND BOX EXTENSION STEM DETAIL

SCALE: N.T.S.

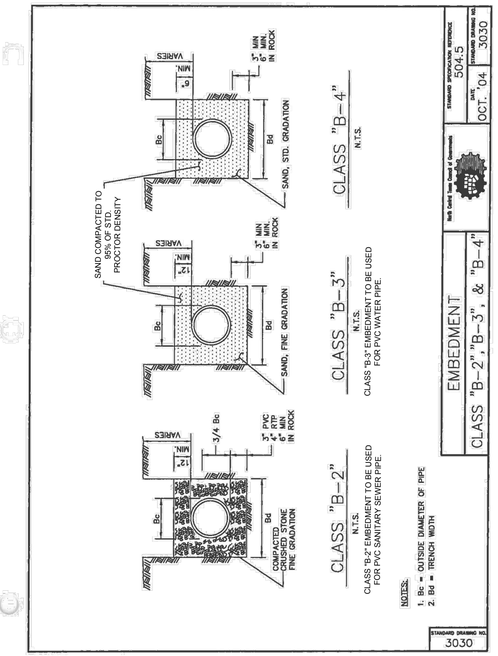

GENERAL NOTE: CHECK WITH STREET OWNER FOR SPECIFIC REQUIREMENTS NOT CONTAINED HEREIN

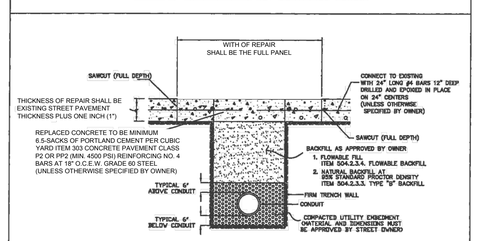

CONCRETE PAVEMENT
N.T.S.

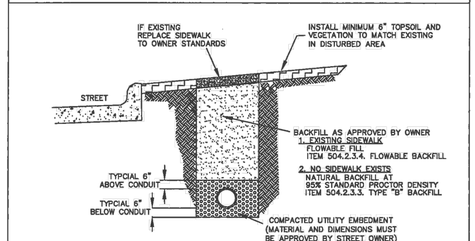

STREET PARKWAY
N.T.S.

PAVEMENT CUT AND REPAIR
CONCRETE AND PARKWAY

North Central Texas Council of Governments

STANDARD SPECIFICATION REFERENCE 402
DATE OCT. '04
STANDARD DRAWING NO. 3070A

GENERAL NOTE: CHECK WITH STREET OWNER FOR SPECIFIC REQUIREMENTS NOT CONTAINED HEREIN

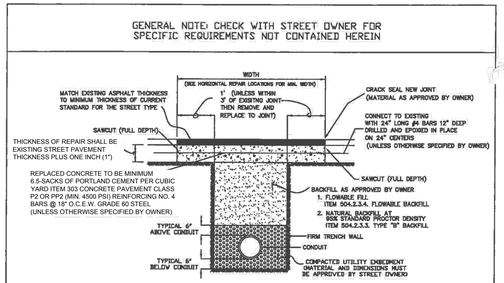

CONCRETE PAVEMENT WITH ASPHALT OVERLAY
N.T.S.

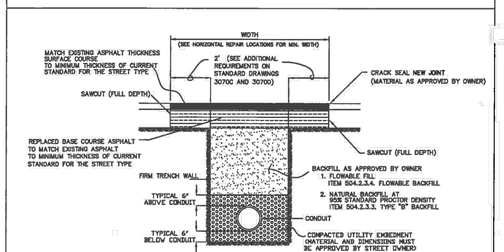

FULL DEPTH ASPHALT PAVEMENT
N.T.S.

PAVEMENT CUT AND REPAIR
ASPHALT

North Central Texas Council of Governments

STANDARD SPECIFICATION REFERENCE 402
DATE OCT. '04
STANDARD DRAWING NO. 3070B

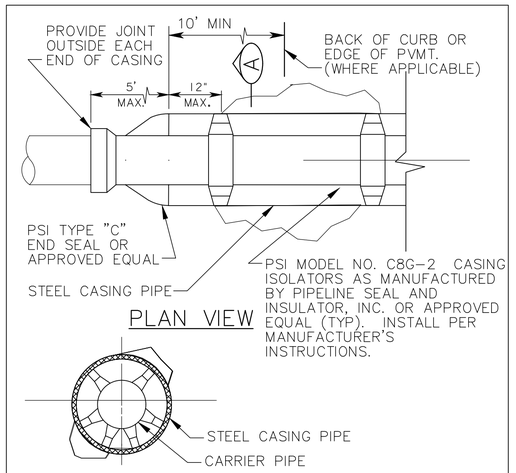

SECTION A

NOTES:

1. FOR SIZE AND LENGTH OF CASING REQUIRED SEE PLAN AND PROFILE SHEETS.
2. ALL CARRIER PIPE JOINTS INSIDE STEEL CASING PIPE ARE TO BE RESTRAINED WITH MEGA-LUG RESTRAINTS OR APRROVED EQUAL.

CASING DETAIL

Not To Scale

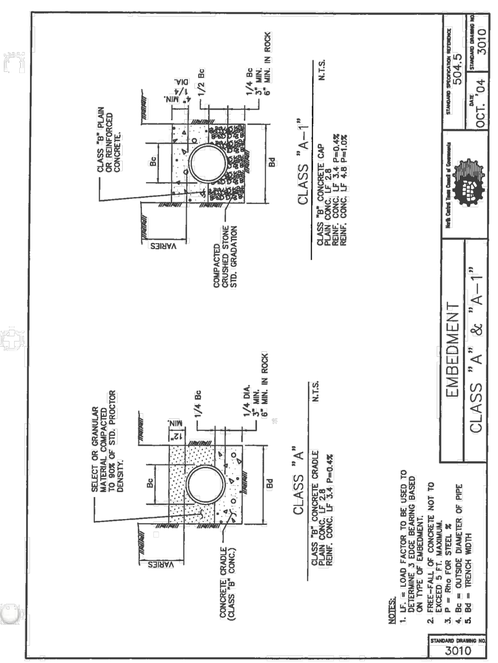

RECORD DRAWING

THESE RECORD DRAWINGS WERE PREPARED BY THE ENGINEER BASED UPON AS-CONSTRUCTED DRAWINGS PROVIDED BY THE CONSTRUCTION CONTRACTOR, WHO REPRESENTED THAT ALL FIELD CHANGES AND OTHER DEVIATIONS FROM THE APPROVED CONSTRUCTION DRAWINGS WERE INCLUDED.

NO.	REVISION	BY	DATE

DESIGNED BY: EJH
DRAWN BY: PMH
CHECKED BY: FCG
APPROVED BY: FCG
DATE: MARCH 22, 2017

ATKINS
18383 PRESTON RD., SUITE 500
DALLAS, TEXAS 75252 - (972) 818-7275
TBPE REG. NO. F-474

TEXAS FRANCISCO C. GUERRERO 95481 LICENSED PROFESSIONAL ENGINEER 07/03/2018

F.M. 3549 16" WATERLINE RELOCATION PROJECT

WATER LINE DETAILS 2

SHEET NO. 14 OF 14 SHEETS

FILE NO. RW-WL-DETAILS
PROJECT NO. 100049910