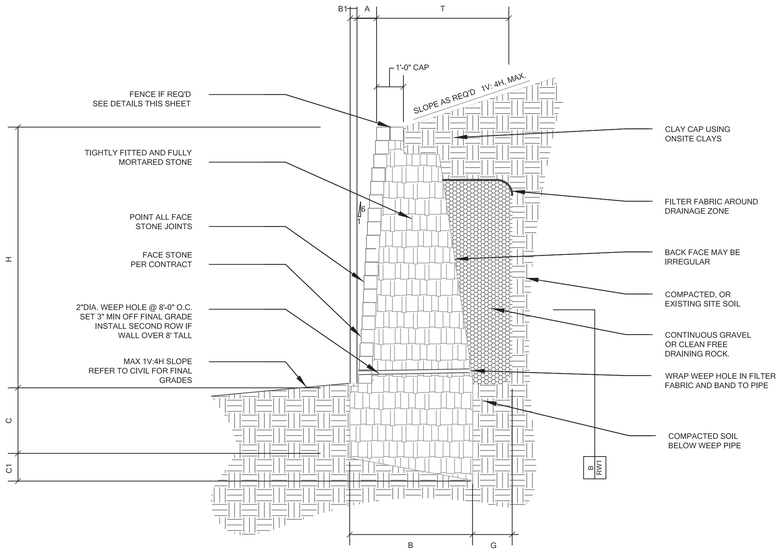

RW1/1 DETAIL OF TYP. RETAINING WALL

SCALE: N.T.S.

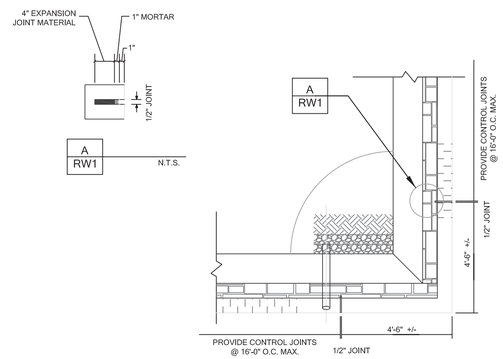

RW1/3 TYPICAL PLAN VIEW AT CORNER

SCALE: N.T.S.

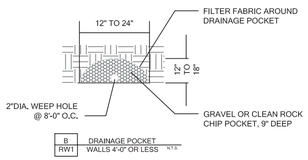

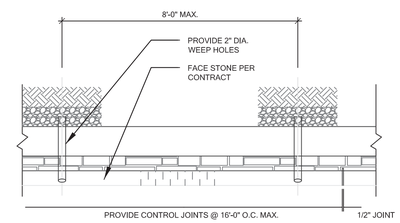

RW1/4 TYPICAL PLAN VIEW AT BASE

SCALE: N.T.S.

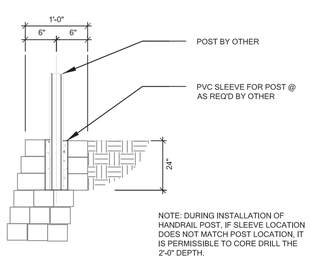

RW1/2 WALL SECTION W/ FENCE POST

SCALE: N.T.S.

RW1/1 - MASONRY WALL SCHEDULE -1500 psf									
1500 psf - BEARING CAPACITY (COMPACTED AND TESTED OR NATURAL SOILS)									
WALL HEIGHT	BASE WIDTH	TOE	BASE DEPTH (TOE)	BASE DEPTH (HEEL)	BATTER	FULLY MORTARED ZONE	THICKNESS OF WALL	DRAINAGE ZONE THICKNESS	BEARING CAPACITY
H	B	B1	C	C1	A	E	T	G	
1' - 0"	1' - 0"	0' - 0"	0' - 10"	0' - 2"	0' - 2"	FULLY	1' - 0"	SEE B/RW1	1500 psf
2' - 0"	1' - 3"	0' - 0"	0' - 10"	0' - 3"	0' - 4"	FULLY	1' - 3"	SEE B/RW1	
3' - 0"	1' - 6"	0' - 0"	0' - 11"	0' - 3"	0' - 6"	FULLY	1' - 7"	SEE B/RW1	
4' - 0"	2' - 0"	0' - 0"	1' - 0"	0' - 4"	0' - 8"	FULLY	2' - 0"	SEE B/RW1	
5' - 0"	2' - 6"	0' - 2"	1' - 3"	0' - 5"	0' - 10"	0' - 9"	2' - 4"	0' - 9"	
WALL DESIGN CRITERIA									
BEARING	SLOPE TOP	SLOPE BOT	ACTIVE PRESSURE	PASSIVE PRESSURE	FRICTION ANGLE BASE	SLOPE OF BACK OF WALL	SURCHARGE		
Q_a	β	β_1	Φ_a	Φ_p	δ	α	q		
1500 psf	14.6 deg	14.6 deg	29 deg	29 deg	19 deg	99.5 deg	0 psf		

RW1/1 RETAINING WALL SCHEDULE

1. Design Building Code
International Building Code, 2009 Edition

2. Geotechnical Report
Firm: ALPHA TESTING, INC.
Report No: G152466-1
Dated: June 17, 2016

3. Geotechnical Criteria
Bearing on Stiff Natural Undisturbed Clayey Sandy Soils or Compacted and Tested Soils
Allowable Bearing: 1500 psf minimum
Friction Angle between Base of Wall and Soil - 17 degrees

Backfill Soil Parameters:
Backfill Soil - Natural Sandy Clays or Fill Soils
Backfill Angle of Internal Friction PHI = 26 degrees

Base Soil Parameters:
Soil at Toe - natural, Undisturbed or Fill Soils
Angle of Internal Friction PHI = 17 degrees

The backfill soil angle of internal friction referred to above is a composite angle of internal friction and includes both cohesion and angle of internal friction of the soils.

The use of very wet or very dry backfill soil should be avoided. The use of heavy equipment within 3'-0" of the wall could damage the wall and should be avoided.

Locate base of walls on undisturbed or properly compacted soil.

4. Materials
Average density of masonry stone wall varies from 135 pcf to 145 pcf. Size of stone within wall varies from 4" to 18". Crushed concrete without rebar is acceptable to be used in the wall construction.

Drainage zone materials may be composed of clean gravel or stone ranging from 1" to 5". Crushed concrete is acceptable provided it is clean and generally free of dust or other deletrious materials.

The cement mortar used for construction of the above grade portion of the masonry stone retaining walls shall be Type 'S' mixed onsite with a minimum 28 day compressive strength of about f'c = 2000 psi.

5. Construction Reviews
DirtSavers, LLC. shall be called for construction review of masonry wall.

6. Retaining Wall Design Constraints
No surcharge load anticipated for structures located greater than 1.5 times wall height.

Install weep holes for all walls 2' tall and over.

Contractor to provide fence sleeves as requested by owner.

Face stones to be per contract.

Minimium 5,000 psi face stones and type S Mortar Required.

Control joints shall be spaced at 25' maximum.

Drain cap to consist of compacted native clay soils with intent to limit absorption of surface runoff.

Walls constructed on fill areas shall be compacted per the geotech.

Due to highly expansive clay soils in this area it is recommended that lot owners maintain good watering practices to limit soil movements and excessive pressures on wall.

Minor variations in the construction of the retaining walls from these documents may be accepted at the discretion of the design engineer.

DIRTSAVERS
2708 Chesapeake Court
Grapevine, TX 76051
PH: 469.834.7446
F-14138

FONTANNA RANCH PH. 2

MASONRY RETAINING WALLS

ROCKWALL, TEXAS

No.	Date	Item

REVISIONS

DB: MAM CHK'D: MAM APP'D: MAM

STATE OF TEXAS
MICHAEL A. MARSHALL
110099
LICENSED
PROFESSIONAL ENGINEER
7/5/17

RETAINING WALL
DETAILS AND NOTES

Project No.	RW070517-1
Date	07.05.2017
Last Revision	07.05.2017

RW1