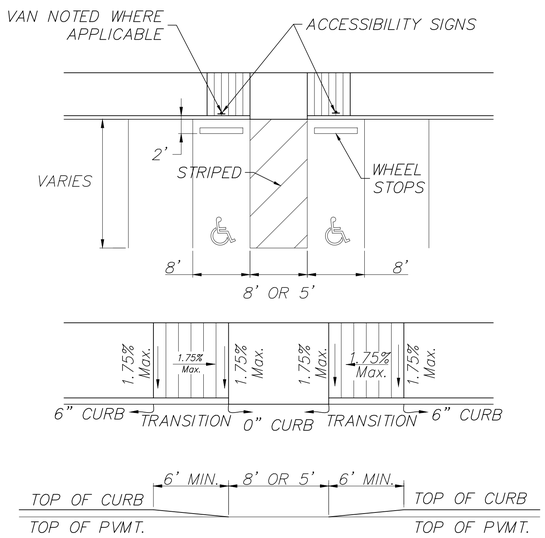

ACCESSIBILITY PARKING DETAIL–CURB SIDE

N.T.S.

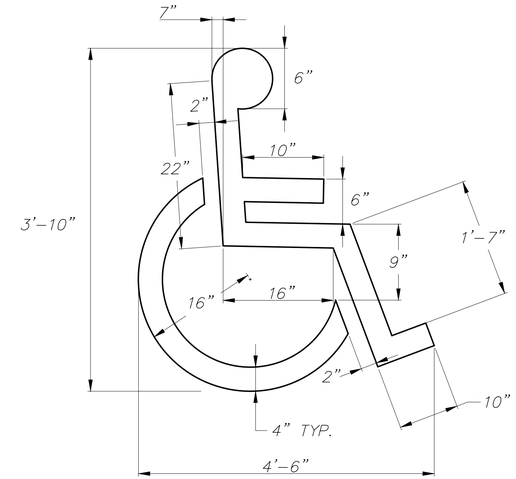

ACCESSIBILITY PARKING SPACE SYMBOL

N.T.S.

SEE SPACES DESIGNATED " ♿ " OR " H "

1'–0" X 1'–6" X 0.080 ALUMINUM ACCESSIBILITY PARKING SIGN. SIGN TO READ "RESERVED PARKING" W/ IDENTIFICATION SYMBOL. BOLT TO STEEL TUBE W/ 3/8" CADMIUM PLATED BOLTS, NUTS, & WASHERS

NOTE: ACCESSIBILITY PARKING SIGN TO CONFORM WITH CURRENT STATE & LOCAL CODES AND REGULATIONS.

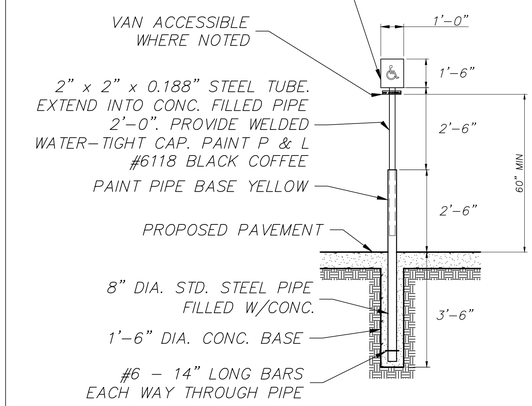

ACCESSIBILITY SIGN DETAIL

N.T.S.

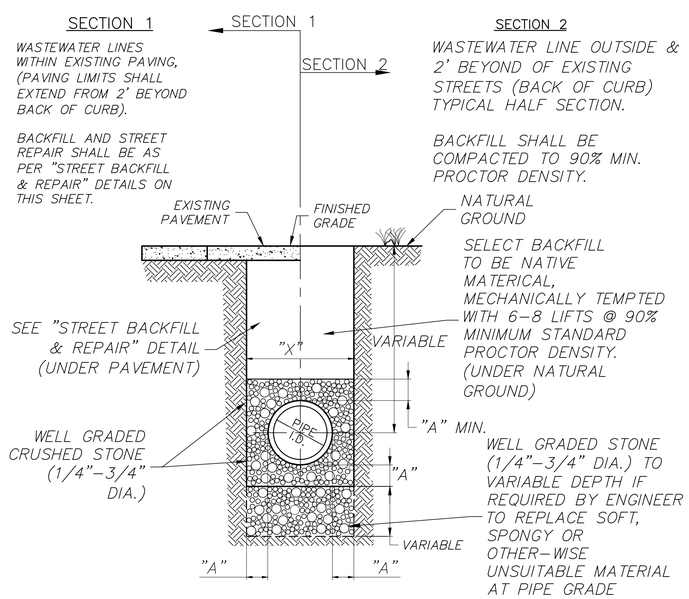

PRIVATE WASTEWATER PIPE LINE EMBEDMENT DETAIL PVC SDR – 26 & 35

N.T.S.

RELEASED FOR CONSTRUCTION
ALL RESPONSIBILITY FOR ADEQUACY OF DESIGN REMAINS WITH THE DESIGN ENGINEER. THE CITY OF ROCKWALL, IN REVIEWING AND RELEASING PLANS FOR CONSTRUCTION, ASSUMES NO RESPONSIBILITY FOR ADEQUACY OR ACCURACY OF DESIGN.

CITY _____ DATE _____

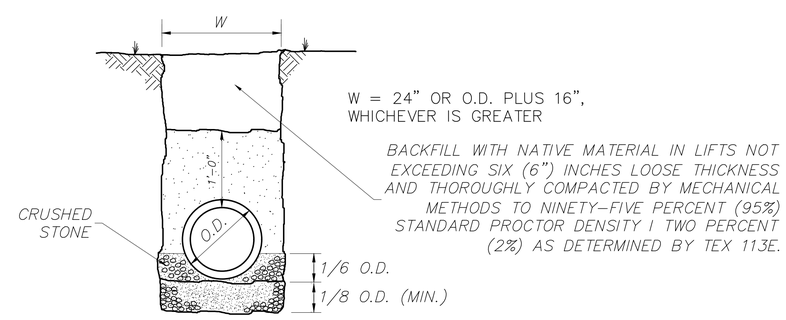

PRIVATE STORM SEWER EMBEDMENT DETAIL

N.T.S.

No.	DATE	REVISION	APPROV.
1.			
2.			
3.			
4.			
5.			

Winkelmann & Associates, Inc.
CONSULTING CIVIL ENGINEERS ■ SURVEYORS
6750 HILLCREST PLAZA DRIVE, SUITE 215
DALLAS, TEXAS 75230 (972) 490-9090
Texas Engineer Registration No. F-2966 (972) 490-1099 FAX
Texas Surveyor Registration No. 10194076

COPYRIGHT © 2026, Winkelmann & Associates, Inc.

STATE OF TEXAS
WILLIAM R. WINKELMANN
120378
LICENSED PROFESSIONAL ENGINEER

02-25-2025
THE SEAL APPEARING ON THIS DOCUMENT WAS AUTHORIZED BY WILLIAM R. WINKELMANN, P.E. # 120378

PRIVATE CIVIL DETAILS (2)

I–30 FRONTAGE RD & FM 3549
ROCKWALL, TX

IKEA @ ROCKWALL HEIGHTS

C-12.01