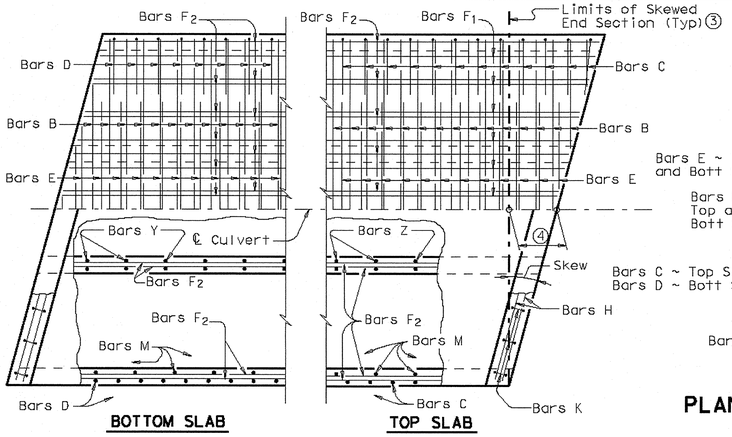

PLAN OF SKEWED ENDS ~ FROM 0° TO 15° ⑦

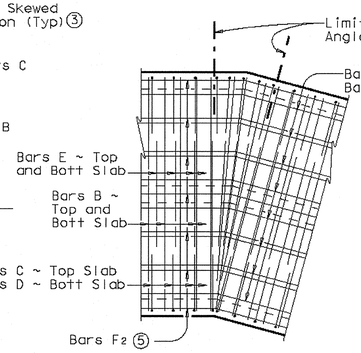

PLAN OF ANGLE SECTION ~ FROM 0° TO 15°

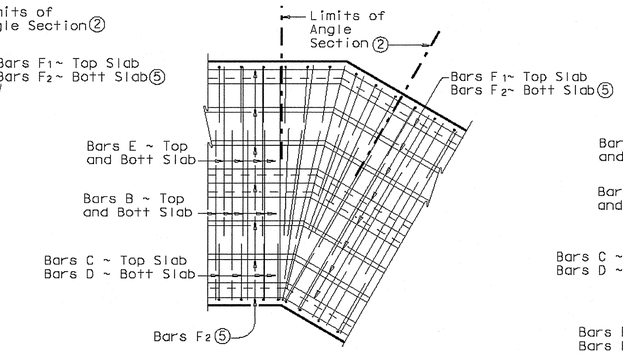

PLAN OF ANGLE SECTION ~ OVER 15° TO 30°

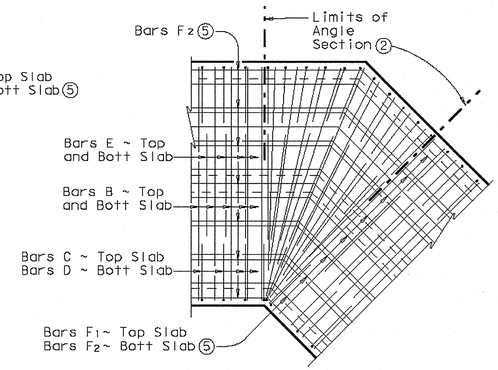

PLAN OF ANGLE SECTION ~ OVER 30° TO 45°

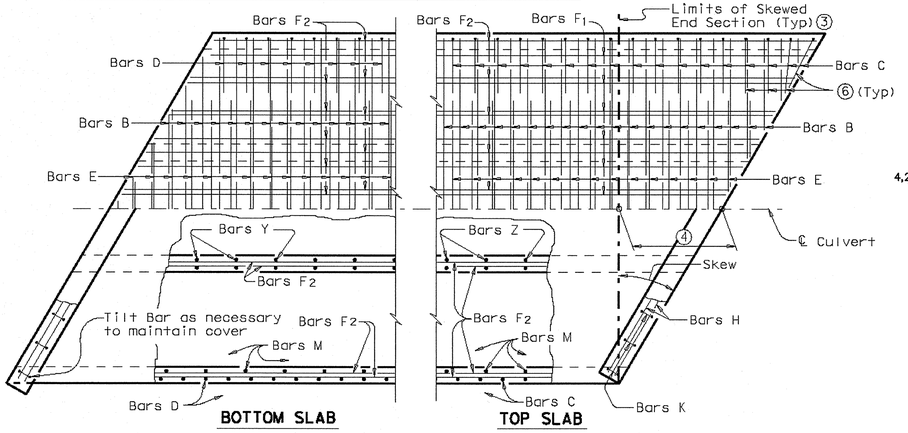

PLAN OF SKEWED ENDS ~ OVER 15° TO 30°

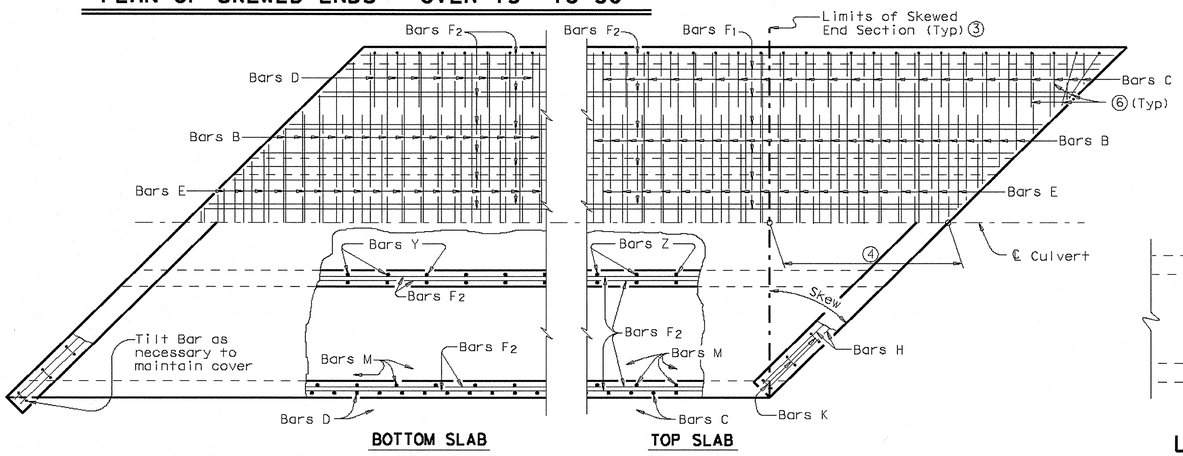

PLAN OF SKEWED ENDS ~ OVER 30° TO 45°

GENERAL NOTES:

Designed according to current AASHTO Standard and Interim Specifications.

All reinforcing steel shall be Grade 60.

All concrete shall be Class "C" with these exceptions: use Class "S" for top slabs of culverts with overlay, with 1-to-2 course surface treatment, or with the top slab as the final riding surface.

Class "C" concrete shall have a minimum compressive strength of ~~3,600~~ 4,200 psi. Class "S" concrete shall have a minimum compressive strength of ~~4,000~~ 4,200 psi.

Refer to Multiple Box Culverts Cast-in-Place standard for details of straight sections of culvert. For skewed sections and angle sections refer to Multiple Box Culverts Cast-in-Place standard for slab and wall dimensions, bar sizes, maximum bar spacing, and any other details not shown. For Skewed ends with curbs, adjust length of Bars H, number of Bars K, curb concrete volume and reinforcing steel weight by dividing the values shown on the culvert standards by the cosine of the skew angle.

The use of permanent forms is not allowed.

Laps for Bars H, when required, shall be 1'-9" for uncoated bars and 2'-7" for epoxy coated.

① For box culverts with less than 2'-0" of fill, the top slab shall be broken back to provide a minimum 1'-10" lap of the existing longitudinal bars with the longitudinal bars in the extension. If the depth of fill is 2'-0" or greater, the top slab shall be broken back to provide a 1'-0" minimum embedment of existing longitudinal reinforcing into the extension. Alternatively, if the fill height is greater than 2'-0", the existing curb may be left in place and 2'-0" long #6 bars shall be drilled and grouted 1'-0" into the existing top slab at 1'-6" center to center spacing. Wings and apron shall be broken back as necessary to install the extension. Exposed wingwall and apron reinforcing may be removed or cleaned and included in the extension. When lengthening existing box culverts with dimensions different than current standard dimensions, horizontal and vertical transitions shall be formed as directed by the Engineer. Bottom slabs shall match to maintain an uninterrupted flow line. Existing and new reinforcing shall be field bent into transition maintaining specified cover requirements. For top slabs of culverts with overlay, with 1-to-2 course surface treatment, or with the top slab as the final riding surface, the "H" dimension may be adjusted to provide a smooth riding surface.

② When the spacing between Bars B or Bars E becomes less than half of the normal spacing, bars shall be cut to avoid fouling

③ The length of Bars B and E will vary in the skewed end sections

④ [One half of overall width] x [Tan of the skew angle]

⑤ Bars F1 and F2 shall be continuous through the angle section. They shall be bent to remain parallel to the walls of the Box Culvert.

⑥ When necessary to avoid fouling in acute corners, the slab extension leg of Bars C and Bars D may be shortened to a minimum of 1'-6" for skews of 30° and 45°.

⑦ For skews of 15° or less, the contractor has the option of placing Bars B, C, D and E parallel to the skewed end while maintaining spacing along centerline box. Lengths of Bars B and E shown on the standards shall be increased to accommodate the skew.

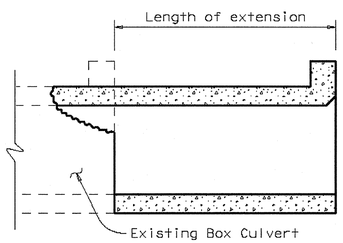

LENGTHENING DETAIL ①

HS20 LOADING

Texas Department of Transportation
Bridge Division

MULTIPLE BOX CULVERTS CAST-IN-PLACE MISCELLANEOUS DETAILS

MC-MD

FILE: mc-mdsle.dgn	DN: GAF	CK: LMW	DW: BWH/TxDOT	CK: GAF
©TxDOT May 2005	DISTRICT	FEDERAL AID PROJECT		SHEET
REVISIONS				
	COUNTY		CONTROL SECT JOB	HIGHWAY

RECORD DRAWING
THIS RECORD DRAWING HEREIN REFLECTS TO THE BEST OF THE DESIGN ENGINEER'S KNOWLEDGE, THE APPROXIMATE LOCATION OF THE CONSTRUCTED WORK, USING INFORMATION AS PROVIDED BY THE CONTRACTORS AND SURVEYED GRADES.

Kimley-Horn and Associates, Inc.
5750 Genesis Court, Suite 200
Frisco, Texas 75034
Tel. No. (972) 335-3580
Fax No. (972) 335-3779

STATE OF TEXAS
PIETER D. KESSELS
87775
LICENSED
PROFESSIONAL ENGINEER
02-27-2008

Pecan Valley Drive and Quail Run Road
City of Rockwall, Texas

TxDOT MULTIPLE BOX CULVERTS CAST-IN-PLACE MISCELLANEOUS DETAILS MC-MD

Scale:	Not To Scale
Designed by:	TxDOT
Drawn by:	TxDOT
Checked by:	P.D.K.
Date:	Feb. 27, 2008
Project No.	068237002

SHEET C-15 OF 47

DISCLAIMER:
The use of this standard is governed by the "Texas Engineering Practice Act". No warranty of any kind is made by TxDOT for any purpose whatsoever. TxDOT assumes no responsibility for the conversion of this standard to other formats or for incorrect results or damages resulting from its use.

ACTIVE FILE LEVELS DISPLAYED | COMMENTS:

IMAGES:
XREFS:
PLOTTED BY: DONALDSON, JUSTIN
WORKSPACE: /G/AUSTIN/PROJ/VALLEY/TOC-STB/MNR/TXDOT-2_MC-MD.DWG
LAST SAVED: 10/29/08 5:29:18 PM

MRC C-15 P Misc Details -