SUMMARY OF QUANTITIES FOR CURB INLETS

DEPTH "D"	5'-0" OPENING						10'-0" OPENING						15'-0" OPENING						20'-0" OPENING					
	WIDTH 3'-0"		WIDTH 4'-0"		WIDTH 5'-0"		WIDTH 3'-0"		WIDTH 4'-0"		WIDTH 5'-0"		WIDTH 3'-0"		WIDTH 4'-0"		WIDTH 5'-0"		WIDTH 3'-0"		WIDTH 4'-0"		WIDTH 5'-0"	
	CONC C.Y.	STEEL LBS.	CONC C.Y.	STEEL LBS.	CONC C.Y.	STEEL LBS.	CONC C.Y.	STEEL LBS.	CONC C.Y.	STEEL LBS.	CONC C.Y.	STEEL LBS.	CONC C.Y.	STEEL LBS.	CONC C.Y.	STEEL LBS.	CONC C.Y.	STEEL LBS.	CONC C.Y.	STEEL LBS.	CONC C.Y.	STEEL LBS.	CONC C.Y.	STEEL LBS.
3'-6"	2.62	306	2.95	332	3.28	373	4.12	479	4.64	521	5.20	564	5.69	667	6.40	721	7.10	775	7.20	846	8.11	909	9.03	976
3'-9"	2.70	309	3.04	341	3.39	373	4.25	494	4.78	536	5.34	579	5.87	687	6.58	741	7.30	796	7.42	874	8.34	937	9.27	1010
4'-0"	2.78	328	3.14	364	3.49	399	4.38	518	4.92	565	5.49	610	6.05	718	6.77	776	7.49	835	7.64	909	8.58	976	9.51	1046
4'-3"	2.87	334	3.23	370	3.59	406	4.51	526	5.06	573	5.64	619	6.22	729	6.95	787	7.69	847	7.87	922	8.81	990	9.75	1061
4'-6"	2.95	356	3.32	394	3.69	431	4.64	558	5.20	607	5.79	656	6.40	770	7.14	830	7.88	891	8.09	973	9.04	1043	9.99	1115
4'-9"	3.03	361	3.41	410	3.79	438	4.77	566	5.34	616	5.94	665	6.57	780	7.32	841	8.07	903	8.31	986	9.27	1056	10.23	1129
5'-0"	3.12	367	3.51	416	3.90	445	4.90	574	5.47	624	6.09	674	6.75	791	7.51	853	8.27	915	8.53	999	9.50	1070	10.47	1144
5'-3"	3.20	383	3.60	424	4.00	465	5.03	600	5.61	652	6.23	704	6.93	827	7.69	890	8.46	955	8.76	1044	9.73	1118	10.71	1194
5'-6"	3.28	389	3.69	430	4.10	472	5.16	608	5.75	661	6.38	713	7.11	837	7.88	901	8.66	967	8.98	1057	9.97	1131	10.95	1208
5'-9"	3.37	405	3.78	451	4.20	495	5.29	635	5.89	690	6.53	744	7.28	874	8.07	940	8.85	1007	9.20	1102	10.20	1178	11.19	1258
6'-0"	3.45	415	3.88	460	4.30	504	5.42	646	6.03	702	6.68	757	7.45	888	8.25	954	9.05	1022	9.42	1119	10.43	1196	11.43	1276
6'-3"	3.53	425	3.97	470	4.41	515	5.55	661	6.17	718	6.83	773	7.63	908	8.44	975	9.24	1044	9.64	1147	10.66	1223	11.67	1305
6'-6"	3.62	437	4.06	486	4.51	532	5.68	681	6.31	739	6.97	797	7.81	935	8.62	1005	9.43	1057	9.87	1178	10.89	1258	11.92	1340
6'-9"	3.70	441	4.15	490	4.61	537	5.81	688	6.45	747	7.12	806	7.98	945	8.81	1015	9.63	1066	10.09	1191	11.12	1272	12.15	1355
7'-0"	3.78	460	4.25	510	4.71	560	5.94	716	6.59	777	7.27	837	8.16	981	8.99	1053	9.82	1126	10.31	1237	11.35	1319	12.40	1404
7'-3"	3.86	465	4.34	516	4.81	567	6.07	724	6.72	785	7.42	846	8.33	992	9.18	1065	10.02	1138	10.53	1249	11.59	1333	12.64	1418
7'-6"	3.95	477	4.43	529	4.91	570	6.20	742	6.86	804	7.57	866	8.51	1016	9.36	1089	10.21	1163	10.75	1290	11.82	1365	12.88	1451
7'-9"	4.03	491	4.53	544	5.02	597	6.33	762	7.00	826	7.71	890	8.67	1040	9.55	1116	10.41	1193	10.98	1313	12.05	1399	13.12	1498
8'-0"	4.12	496	4.62	550	5.12	604	6.46	770	7.14	834	7.86	899	8.86	1051	9.73	1129	10.60	1205	11.20	1325	12.28	1412	13.36	1510
8'-3"	4.20	504	4.71	559	5.22	613	6.59	784	7.28	849	8.01	915	9.04	1069	9.92	1149	10.80	1228	11.42	1353	12.51	1440	13.60	1529
8'-6"	4.28	519	4.80	576	5.32	632	6.71	804	7.42	871	8.16	938	9.21	1107	10.10	1176	10.99	1257	11.64	1385	12.74	1474	13.84	1565
8'-9"	4.37	528	4.90	586	5.42	643	6.84	819	7.56	886	8.31	954	9.39	1119	10.29	1199	11.18	1280	11.87	1410	12.97	1500	14.08	1592
9'-0"	4.45	545	4.99	605	5.53	664	6.97	842	7.70	912	8.46	982	9.56	1148	10.47	1231	11.38	1313	12.09	1447	13.21	1539	14.32	1631
9'-3"	4.53	554	5.08	614	5.63	674	7.10	858	7.84	929	8.60	999	9.74	1169	10.66	1252	11.57	1335	12.31	1474	13.44	1563	14.56	1660
9'-6"	4.62	568	5.17	630	5.73	692	7.23	878	7.97	950	8.75	1022	9.92	1195	10.84	1280	11.77	1365	12.53	1505	13.67	1600	14.80	1696
10'-0"	4.78	582	5.36	645	5.93	708	7.49	900	8.11	974	9.05	1048	10.27	1227	11.21	1312	12.16	1399	12.98	1546	14.13	1642	15.29	1739

NOTE:
FOR CONVENIENCE, DEPTHS OF INLETS SHOWN IN ABOVE TABLES ARE IN INCREMENTS OF 3 INCHES BUT ANY DEPTHS OTHER THAN THOSE SHOWN ABOVE MAY BE USED WHEREVER DEEMED NECESSARY. QUANTITIES FOR OTHER DEPTHS FALLING WITHIN THE LIMITS OF THE TABLE MAY BE FOUND BY INTERPOLATION.

STANDARD DRAWING NO. 6020E

CURB INLET
SUMMARY OF QUANTITIES

North Central Texas Council of Governments

STANDARD SPECIFICATION REFERENCE 7.6.
DATE NOV. '96 | STANDARD DRAWING NO. 6020E

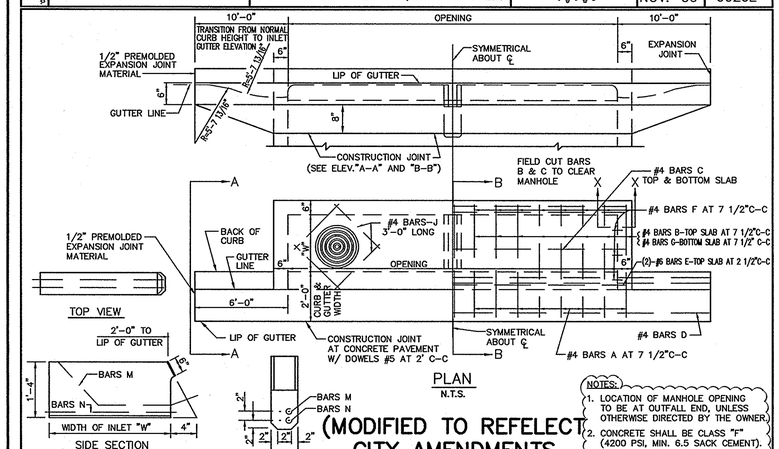

TRANSVERSE BEAM DETAIL
(FOR USE WITH 15' & 20' INLETS)
N.T.S.

NOTES:
1. LOCATION OF MANHOLE OPENING TO BE AT OUTFALL END, UNLESS OTHERWISE DIRECTED BY THE OWNER.
2. CONCRETE SHALL BE CLASS "F" (4200 PSI, MIN. 6.5 SACK CEMENT).
3. FLY ASH IS NOT ALLOWED IN CONCRETE FOR STRUCTURES.

(MODIFIED TO REFELECT CITY AMENDMENTS TO NCTCOG DETAIL)

STANDARD DRAWING NO. 6020A

CURB INLET
5', 10', 15' OR 20' OPENING

North Central Texas Council of Governments

STANDARD SPECIFICATION REFERENCE 7.6.
DATE NOV. '96 | STANDARD DRAWING NO. 6020A

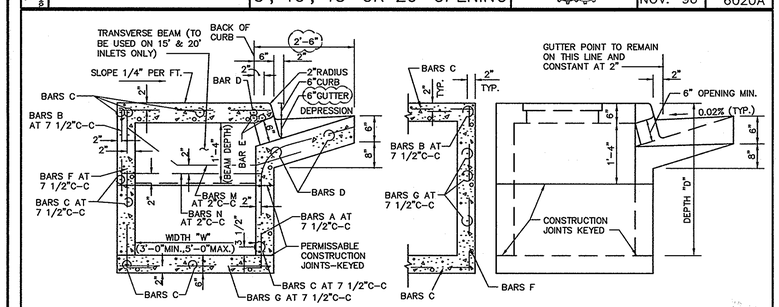

GENERAL NOTES:
1. ALL CONCRETE SHALL BE CLASS "F" CONCRETE (4200 PSI, MIN. 6.5 SACK CEMENT).
2. REINFORCING BARS SHALL BE STANDARD GRADE STEEL, DEFORMED REINFORCING BARS OF A DIAMETER AND LENGTH AS SHOWN.
3. CHAMFER ALL EXPOSED CORNERS 3/4" EXCEPT WHERE OTHERWISE NOTED.
4. DIMENSIONS RELATING TO REINFORCING STEEL ARE TO CENTERS OF BARS.
5. FIELD CUT AND BEND BARS AS NECESSARY TO ACCOMODATE STORM SEWER PIPE.
6. RING AND COVER SHALL BE APPROVED BY THE OWNER AND INSTALLED BY THE CONTRACTOR.
7. FLY ASH IS NOT ALLOWED IN CONCRETE FOR STRUCTURES.

(MODIFIED TO REFELECT CITY AMENDMENTS TO NCTCOG DETAIL)

STANDARD DRAWING NO. 6020B

CURB INLET
CROSS SECTION & INLET THROAT

North Central Texas Council of Governments

STANDARD SPECIFICATION REFERENCE 7.6.
DATE NOV. '96 | STANDARD DRAWING NO. 6020B

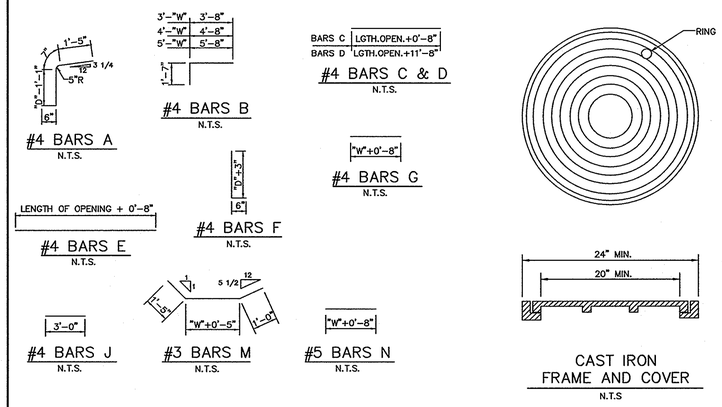

(MODIFIED TO REFELECT CITY AMENDMENTS TO NCTCOG DETAIL)

STANDARD DRAWING NO. 6020C

NOTE:
INLET LID TO BE LOCKING.

CURB INLET
REBAR & M.H. FRAME & COVER

North Central Texas Council of Governments

STANDARD SPECIFICATION REFERENCE 7.6.
DATE NOV. '96 | STANDARD DRAWING NO. 6020C

BILL OF REINFORCING STEEL

DEPTH "D"	ALL WIDTHS AND LENGTHS				OPENING LENGTH "L" = 5ft						OPENING LENGTH "L" = 10ft						OPENING LENGTH "L" = 15 ft						OPENING LENGTH "L" = 20 ft					
					Widths "W" 3ft	4ft	5ft				Widths "W" 3ft	4ft	5ft				Widths "W" 3ft	4ft	5ft				Widths "W" 3ft	4ft	5ft			
	BARS C	BARS D	BARS E	BARS J	BARS F	BARS G	BARS A	BARS B	BARS C	BARS D	BARS F	BARS G	BARS A	BARS B	BARS C	BARS D	BARS F	BARS G	BARS A	BARS B	BARS C	BARS D	BARS F	BARS G	BARS A	BARS B	BARS C	BARS D
3'-6"	17	3	2	4	20	24	28	10	10	20	28	32	36	18	18	28	36	40	44	26	26	36	2	2	44	48	52	34
3'-9"	18	"	"	"	"	"	"	"	"	20	"	"	"	"	"	28	"	"	"	"	"	36	"	"	"	"	"	"	44
4'-0"	19	"	"	"	"	"	"	"	"	24	"	"	"	"	"	32	"	"	"	"	"	40	"	"	"	"	"	"	48
4'-3"	19	"	"	"	"	"	"	"	"	24	"	"	"	"	"	32	"	"	"	"	"	40	"	"	"	"	"	"	48
4'-6"	21	"	"	"	"	"	"	"	"	26	"	"	"	"	"	34	"	"	"	"	"	42	"	"	"	"	"	"	50
4'-9"	21	"	"	"	"	"	"	"	"	26	"	"	"	"	"	34	"	"	"	"	"	42	"	"	"	"	"	"	50
5'-0"	21	"	"	"	"	"	"	"	"	26	"	"	"	"	"	34	"	"	"	"	"	42	"	"	"	"	"	"	50
5'-3"	23	"	"	"	"	"	"	"	"	28	"	"	"	"	"	36	"	"	"	"	"	44	"	"	"	"	"	"	52
5'-6"	23	"	"	"	"	"	"	"	"	28	"	"	"	"	"	36	"	"	"	"	"	44	"	"	"	"	"	"	52
5'-9"	25	"	"	"	"	"	"	"	"	30	"	"	"	"	"	38	"	"	"	"	"	46	"	"	"	"	"	"	54
6'-0"	25	"	"	"	"	"	"	"	"	30	"	"	"	"	"	38	"	"	"	"	"	46	"	"	"	"	"	"	54
6'-3"	26	"	"	"	"	"	"	"	"	30	"	"	"	"	"	38	"	"	"	"	"	46	"	"	"	"	"	"	54
6'-6"	27	"	"	"	"	"	"	"	"	32	"	"	"	"	"	40	"	"	"	"	"	48	"	"	"	"	"	"	56
6'-9"	27	"	"	"	"	"	"	"	"	32	"	"	"	"	"	40	"	"	"	"	"	48	"	"	"	"	"	"	56
7'-0"	29	"	"	"	"	"	"	"	"	34	"	"	"	"	"	42	"	"	"	"	"	50	"	"	"	"	"	"	58
7'-3"	29	"	"	"	"	"	"	"	"	34	"	"	"	"	"	42	"	"	"	"	"	50	"	"	"	"	"	"	58
7'-6"	30	"	"	"	"	"	"	"	"	34	"	"	"	"	"	42	"	"	"	"	"	50	"	"	"	"	"	"	58
7'-9"	31	"	"	"	"	"	"	"	"	36	"	"	"	"	"	44	"	"	"	"	"	52	"	"	"	"	"	"	60
8'-0"	31	"	"	"	"	"	"	"	"	36	"	"	"	"	"	44	"	"	"	"	"	52	"	"	"	"	"	"	60
8'-3"	32	"	"	"	"	"	"	"	"	36	"	"	"	"	"	44	"	"	"	"	"	52	"	"	"	"	"	"	60
8'-6"	33	"	"	"	"	"	"	"	"	38	"	"	"	"	"	46	"	"	"	"	"	54	"	"	"	"	"	"	62
8'-9"	34	"	"	"	"	"	"	"	"	38	"	"	"	"	"	46	"	"	"	"	"	54	"	"	"	"	"	"	62
9'-0"	35	"	"	"	"	"	"	"	"	40	"	"	"	"	"	48	"	"	"	"	"	56	"	"	"	"	"	"	64
9'-3"	36	"	"	"	"	"	"	"	"	40	"	"	"	"	"	48	"	"	"	"	"	56	"	"	"	"	"	"	64
9'-6"	37	"	"	"	"	"	"	"	"	42	"	"	"	"	"	50	"	"	"	"	"	58	"	"	"	"	"	"	66
10'-0"	38	"	"	"	"	"	"	"	"	42	"	"	"	"	"	50	"	"	"	"	"	58	"	"	"	"	"	"	66

NOTE:
FOR CONVENIENCE, DEPTHS OF INLETS SHOWN IN ABOVE TABLES ARE IN INCREMENTS OF 3 INCHES BUT ANY DEPTHS OTHER THAN THOSE SHOWN ABOVE MAY BE USED WHEREVER DEEMED NECESSARY. QUANTITIES FOR OTHER DEPTHS FALLING WITHIN THE LIMITS OF THE TABLE MAY BE FOUND BY INTERPOLATION.

STANDARD DRAWING NO. 6020D

CURB INLET
BILL OF REINFORCING STEEL

North Central Texas Council of Governments

STANDARD SPECIFICATION REFERENCE 7.6.
DATE NOV. '96 | STANDARD DRAWING NO. 6020D

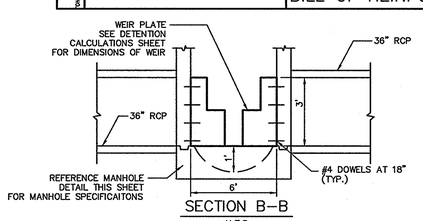

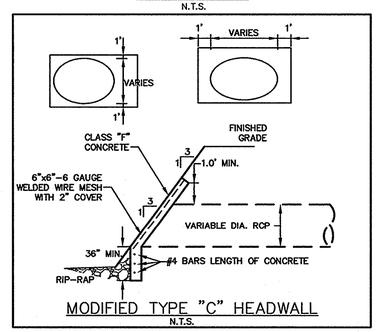

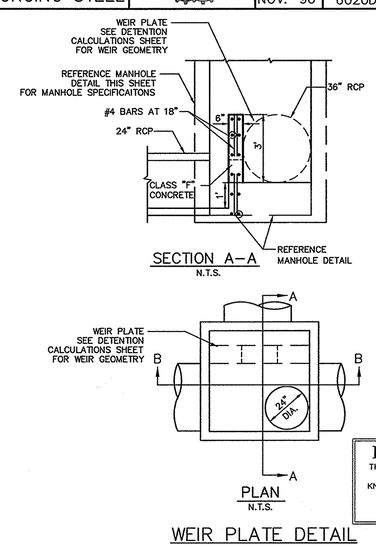

RECORD DRAWING
THIS RECORD DRAWING HEREIN REFLECTS TO THE BEST OF THE DESIGN ENGINEER'S KNOWLEDGE, THE APPROXIMATE LOCATION OF THE CONSTRUCTED WORK, USING INFORMATION AS PROVIDED BY THE CONTRACTORS AND SURVEYED GRADES.

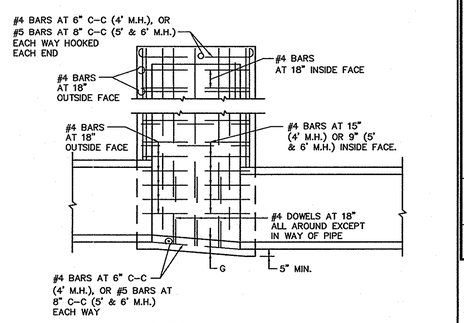

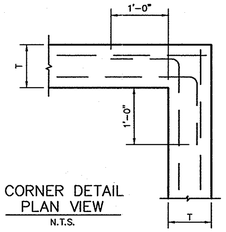

CORNER DETAIL
PLAN VIEW
N.T.S.

NOTES:
1. SLOPE INVERT OF MANHOLE AS INDICATED ON PLAN-PROFILE SHEET.
2. LAYERS OF REINFORCING STEEL NEAREST THE INTERIOR AND EXTERIOR SURFACE SHALL HAVE A COVER OF 2" TO THE CENTER OF BARS, UNLESS OTHERWISE NOTED.
3. CONCRETE SHALL BE CLASS "F" (4200 PSI, MIN. 6.5 SACK CEMENT).
4. FLY ASH IS NOT ALLOWED IN CONCRETE FOR STRUCTURES.

(MODIFIED TO REFELECT CITY AMENDMENTS TO NCTCOG DETAIL)

STORMWATER MANHOLE
4', 5', OR 6' SQUARE

North Central Texas Council of Governments

STANDARD SPECIFICATION REFERENCE 6.7.
DATE NOV. '96 | STANDARD DRAWING NO. 6010B

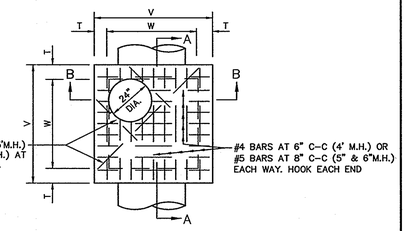

M.H. SIZE(W)	V	T	E	F	G	H
4'	5'-4"	8"	6"	9"	6"	1'-3"
5'	6'-4"	8"	6"	12"	8"	1'-8"
6'	7'-6"	9"	9"	16"	10"	2'-2"

TABLE OF DIMENSIONS
N.T.S.

(MODIFIED TO REFELECT CITY AMENDMENTS TO NCTCOG DETAIL)

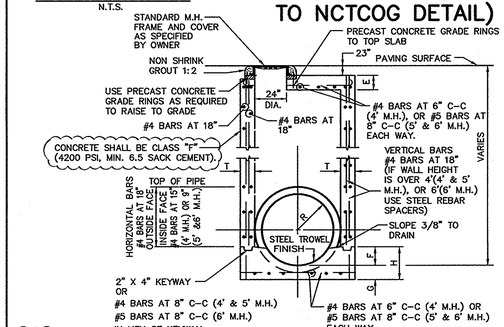

NOTE:
FLY ASH IS NOT ALLOWED IN CONCRETE FOR STRUCTURES.

STORMWATER MANHOLE
4', 5', OR 6' SQUARE

North Central Texas Council of Governments

STANDARD SPECIFICATION REFERENCE 6.7.
DATE NOV. '96 | STANDARD DRAWING NO. 6010A

NOTES:

1. **REFERENCE CITY OF ROCKWALL STANDARD DRAWINGS FOR ALL OTHER APPLICABLE DETAILS.**
2. **REFERENCE CITY OF ROCKWALL AMENDMENTS TO THE NCTCOG STANDARD DRAWINGS (AS CLOUDED ON THE MODIFIED NCTCOG STANDARD DRAWINGS SHOWN ON THIS PAGE).**

No.	Date	Revisions	App.

Kimley-Horn and Associates, Inc.
Tel. No. (972) 335-3580
Fax No. (972) 335-3779
9300 Wade Boulevard, Suite 320
Frisco, Texas 75035

STATE OF TEXAS
PIETER D. KESSELS
87775
LICENSED PROFESSIONAL ENGINEER
5-25-2004
FOR CONSTRUCTION

ROCKWALL COMMONS MIXED USE TRACT
CITY OF ROCKWALL, TEXAS

STORM SEWER DETAILS

Scale:
Designed by:
Drawn by:
Checked by: P.D.K.
Date: 05\25\04
Project No. 067051007

SHEET C-23 OF 24

Q:\067051007-Rockwall Commons\Civil\Dwg\Storm.dwg 05/24/2004 15:40
XREF = 1-24-06, 7-20-02