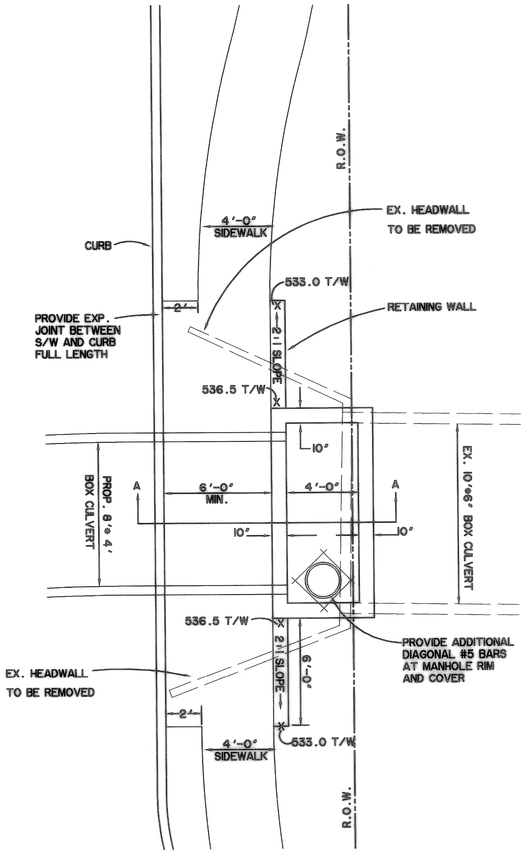

PLAN

SPECIAL JUNCTION BOX

N.T.S.

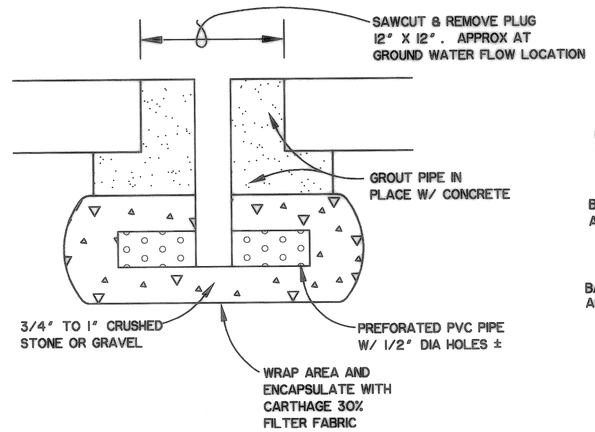

GROUND WATER DRAIN DETAIL

N.T.S.

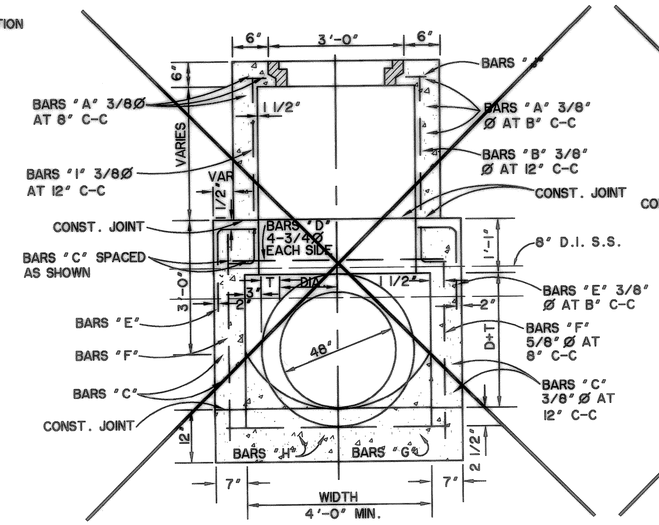

SECTION A-A

N.T.S.

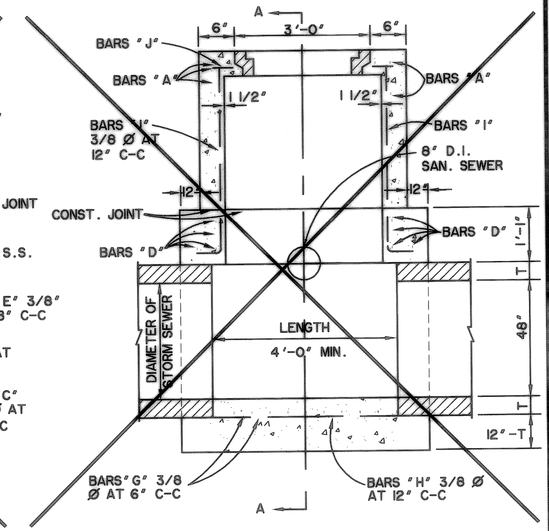

ELEVATION

N.T.S.

DELETED - S.S. ROUTED OVER PROPOSED STORM DRAIN PIPE

NOTE: FRAME AND COVER SHALL BE BASS & HAYS PATTERN NO. 400-24 OR EQUAL AND SHALL OF GRAY CAST IRON CONFORMING TO A.S.M. SPEC. A-48 FOR CLASS 30 CAST IRON.

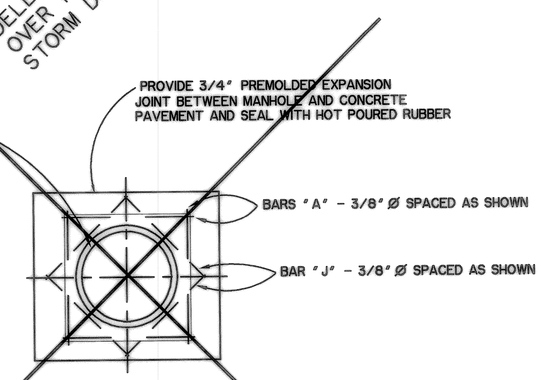

TOP PLAN

STORM SEWER MANHOLE AT S.S. CROSSING

N.T.S.

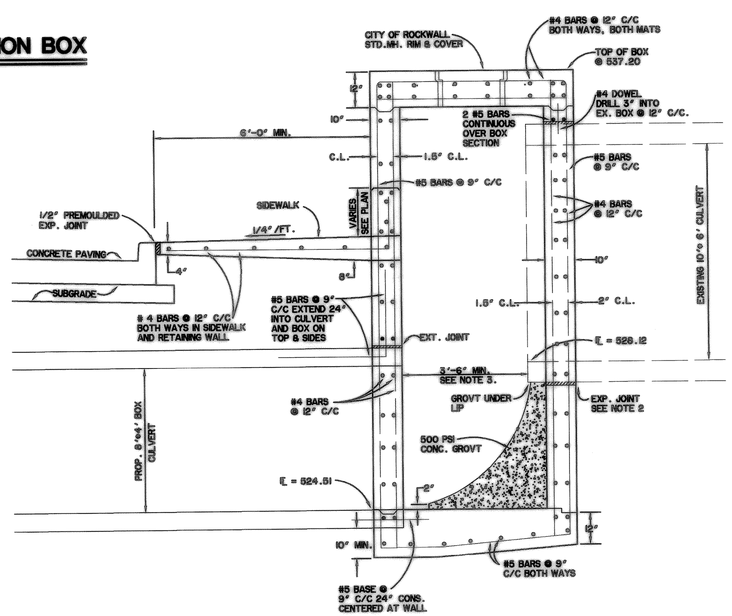

SECTION A-A

N.T.S.

"RECORD PLANS"
06-25-99

PREPARED BY:
WIER & ASSOCIATES, INC.
ENGINEERS SURVEYORS LAND PLANNERS
4300 BELTWAY PLACE SUITE 130 ARLINGTON, TEXAS 76018 METRO (817)467-7700
4100 AMON CARTER BLVD. SUITE 200 FORT WORTH, TEXAS 76155 METRO (817)355-4037

RALPH HALL PARKWAY
CITY OF ROCKWALL
ROCKWALL COUNTY, TEXAS

MISCELLANEOUS DETAILS

STATE OF TEXAS
ULYS LANE III
40864
REGISTERED PROFESSIONAL ENGINEER
6-30-99

COPYRIGHT © WIER & ASSOCIATES, INC.
LAST SHEET EDIT DATE 06-28-99
WA#97057

SHEET NO. 35

TIME: 1:28PM FILE: DTL.dwg