CASE COVER SHEET

City of Rockwall
Planning and Zoning Department
385 S. Goliad Street
Rockwall, Texas 75087

PLANNING & ZONING CASE NO. SP2025-001

PLANNING & ZONING FEE $ 100.00

PLATTING APPLICATION
- ☐ MASTER PLAT
- ☐ PRELIMINARY PLAT
- ☐ FINAL PLAT
- ☐ REPLAT
- ☐ AMENDING OR MINOR PLAT
- ☐ PLAT REINSTATEMENT REQUEST

SITE PLAN APPLICATION
- ☐ SITE PLAN
- ☑ AMENDED SITE PLAN/ELEVATIONS/LANDSCAPING

ZONING APPLICATION
- ☐ ZONING CHANGE
- ☐ SPECIFIC USE PERMIT
- ☐ PD DEVELOPMENT PLAN

OTHER APPLICATION
- ☐ TREE REMOVAL
- ☐ VARIANCE REQUEST/SPECIAL EXCEPTIONS

RECORD OF RECOMMENDATIONS, VOTING RECORDS, AND CONDITIONS OF APPROVAL

ARCHITECTURE REVIEW BOARD

PLANNING AND ZONING COMMISSION

On January 28, 2025, the Planning and Zoning Commission approved a motion to table the case two (2) weeks by a vote of 4-0, with Commissioners Conway, Thompson, and Hustings absent.
On February 11, 2025, the Planning and Zoning Commission approved a motion to approve the Amended Site Plan by a vote of 7-0.

CITY COUNCIL READING #1

CITY COUNCIL READING #2

CONDITIONS OF APPROVAL

NOTES

DEVELOPMENT APPLICATION

City of Rockwall
Planning and Zoning Department
385 S. Goliad Street
Rockwall, Texas 75087

STAFF USE ONLY

PLANNING & ZONING CASE NO.

NOTE: THE APPLICATION IS NOT CONSIDERED ACCEPTED BY THE CITY UNTIL THE PLANNING DIRECTOR AND CITY ENGINEER HAVE SIGNED BELOW.

DIRECTOR OF PLANNING:

CITY ENGINEER:

PLEASE CHECK THE APPROPRIATE BOX BELOW TO INDICATE THE TYPE OF DEVELOPMENT REQUEST [SELECT ONLY ONE BOX]:

PLATTING APPLICATION FEES:

- ☐ MASTER PLAT ($100.00 + $15.00 ACRE) [1]
- ☐ PRELIMINARY PLAT ($200.00 + $15.00 ACRE) [1]
- ☐ FINAL PLAT ($300.00 + $20.00 ACRE) [1]
- ☐ REPLAT ($300.00 + $20.00 ACRE) [1]
- ☐ AMENDING OR MINOR PLAT ($150.00)
- ☐ PLAT REINSTATEMENT REQUEST ($100.00)

SITE PLAN APPLICATION FEES:

- ☐ SITE PLAN ($250.00 + $20.00 ACRE) [1]
- ☒ AMENDED SITE PLAN/ELEVATIONS/LANDSCAPING PLAN ($100.00)

ZONING APPLICATION FEES:

- ☐ ZONING CHANGE ($200.00 + $15.00 ACRE) [1]
- ☐ SPECIFIC USE PERMIT ($200.00 + $15.00 ACRE) [1 & 2]
- ☐ PD DEVELOPMENT PLANS ($200.00 + $15.00 ACRE) [1]

OTHER APPLICATION FEES:

- ☐ TREE REMOVAL ($75.00)
- ☐ VARIANCE REQUEST/SPECIAL EXCEPTIONS ($100.00) [2]

NOTES:
[1]: IN DETERMINING THE FEE, PLEASE USE THE EXACT ACREAGE WHEN MULTIPLYING BY THE PER ACRE AMOUNT. FOR REQUESTS ON LESS THAN ONE ACRE, ROUND UP TO ONE (1) ACRE.
[2]: A *$1,000.00* FEE WILL BE ADDED TO THE APPLICATION FEE FOR ANY REQUEST THAT INVOLVES CONSTRUCTION WITHOUT OR NOT IN COMPLIANCE TO AN APPROVED BUILDING PERMIT.

PROPERTY INFORMATION [PLEASE PRINT]

ADDRESS	NE CORNER JOHN KING BLVD & SH 276				
SUBDIVISION	CAMBRIDGE ESTATES	LOT	1	BLOCK	1
GENERAL LOCATION	NE CORNER JOHN KING BLVD & SH 276				

ZONING, SITE PLAN AND PLATTING INFORMATION [PLEASE PRINT]

CURRENT ZONING	PD10 HIGHWAY OVERLAY	CURRENT USE	UNDER CONSTRUCTION		
PROPOSED ZONING	PD10 HIGHWAY OVERLAY	PROPOSED USE	MINI STORAGE		
ACREAGE	3.682	LOTS [CURRENT]	1	LOTS [PROPOSED]	1

☐ *SITE PLANS AND PLATS: BY CHECKING THIS BOX YOU ACKNOWLEDGE THAT DUE TO THE PASSAGE OF HB3167 THE CITY NO LONGER HAS FLEXIBILITY WITH REGARD TO ITS APPROVAL PROCESS, AND FAILURE TO ADDRESS ANY OF STAFF'S COMMENTS BY THE DATE PROVIDED ON THE DEVELOPMENT CALENDAR WILL RESULT IN THE DENIAL OF YOUR CASE.*

OWNER/APPLICANT/AGENT INFORMATION [PLEASE PRINT/CHECK THE PRIMARY CONTACT/ORIGINAL SIGNATURES ARE REQUIRED]

☐ OWNER	ADV Rockwall John King Property Owner LLC	☐ APPLICANT	SAME
CONTACT PERSON	BRIAN BACA	CONTACT PERSON	
ADDRESS	2221 Lakeside Blvd. Suite 1260	ADDRESS	
CITY, STATE & ZIP	Richardson, TX 75082	CITY, STATE & ZIP	
PHONE	214-308-5225	PHONE	
E-MAIL	bbaca@advconstruction.net	E-MAIL	

NOTARY VERIFICATION [REQUIRED]

BEFORE ME, THE UNDERSIGNED AUTHORITY, ON THIS DAY PERSONALLY APPEARED _____ [*OWNER*] THE UNDERSIGNED, WHO STATED THE INFORMATION ON THIS APPLICATION TO BE TRUE AND CERTIFIED THE FOLLOWING:

"I HEREBY CERTIFY THAT I AM THE OWNER FOR THE PURPOSE OF THIS APPLICATION; ALL INFORMATION SUBMITTED HEREIN IS TRUE AND CORRECT; AND THE APPLICATION FEE OF $ 100.00, TO COVER THE COST OF THIS APPLICATION, HAS BEEN PAID TO THE CITY OF ROCKWALL ON THIS THE 21 ST DAY OF JANUARY, 20 25. BY SIGNING THIS APPLICATION, I AGREE THAT THE CITY OF ROCKWALL (I.E. "CITY") IS AUTHORIZED AND PERMITTED TO PROVIDE INFORMATION CONTAINED WITHIN THIS APPLICATION TO THE PUBLIC. THE CITY IS ALSO AUTHORIZED AND PERMITTED TO REPRODUCE ANY COPYRIGHTED INFORMATION SUBMITTED IN CONJUNCTION WITH THIS APPLICATION, IF SUCH REPRODUCTION IS ASSOCIATED OR IN RESPONSE TO A REQUEST FOR PUBLIC INFORMATION."

GIVEN UNDER MY HAND AND SEAL OF OFFICE ON THIS THE 21 ST DAY OF JANUARY, 20 25.

OWNER'S SIGNATURE

NOTARY PUBLIC IN AND FOR THE STATE OF TEXAS

MY COMMISSION EXPIRES

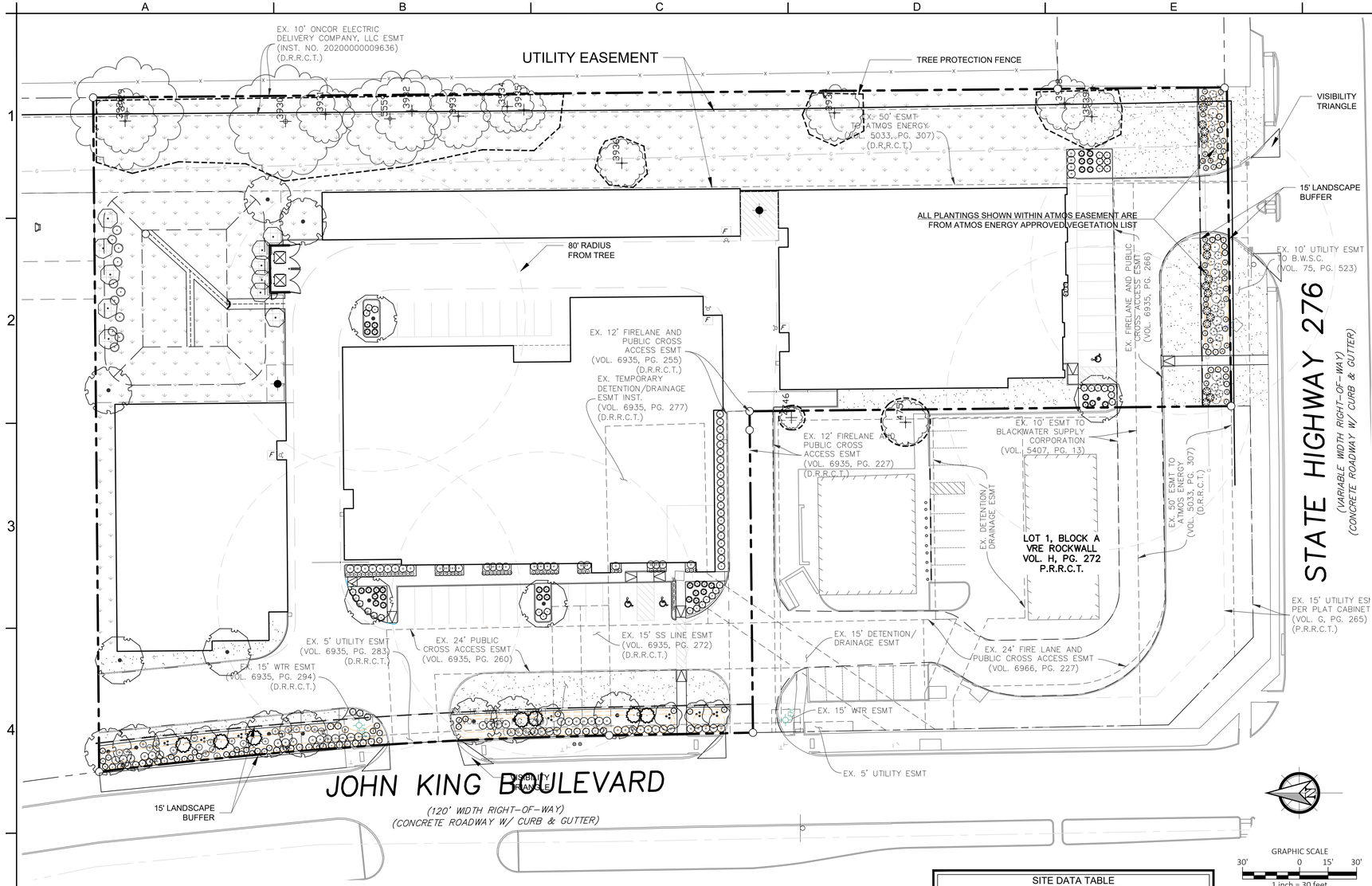

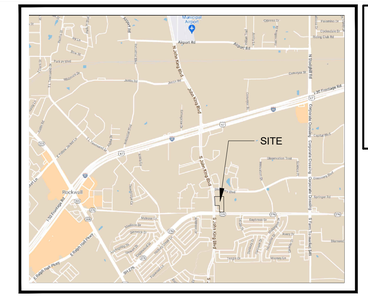

VICINITY MAP
(NOT TO SCALE)

National Presence. Local Expertise.
EVERGREEN DESIGN GROUP
800.680.6630
www.evergreendesigngroup.com
LANDSCAPE ARCHITECTURE
LAND PLANNING · IRRIGATION DESIGN

GRAPHIC SCALE
30' 0 15' 30'
1 inch = 30 feet

PLANT SCHEDULE

CANOPY TREES	QTY	BOTANICAL / COMMON NAME	CAL	SIZE
	10	QUERCUS MUHLENBERGIA CHINQUAPIN OAK	4" CAL*	14'-16' HT
	6	ULMUS CRASSIFOLIA CEDAR ELM	4" CAL*	16'-18' HT

*12 CANOPY TREES TO BE USED FOR MITIGATION, ALL CANOPY TREES MUST BE 4" CAL.

ACCENT TREES	QTY	BOTANICAL / COMMON NAME	CAL	SIZE
	7	CERCIS CANADENSIS EASTERN REDBUD 3-5 STEMS	3" CAL. 1" / STEM	4' -6' HT
	7	ILEX DECIDUA POSSUM HAW 3-5 STEMS	3" CAL. 1" / STEM	4' -6' HT

LARGE SHRUBS	QTY	BOTANICAL / COMMON NAME	CONT	
	11	RHUS VIRENS V. VIRENS EVERGREEN SUMAC	10 GAL	4'-6' HT
	10	TAXUS CUSPIDATA SPREADING YEW	10 GAL	3'-5' HT

MEDIUM SHRUBS	QTY	BOTANICAL / COMMON NAME	CONT
	83	ILEX CORNUTA 'BURFORDII NANA' DWARF BURFORD HOLLY	5 GAL
	23	LOROPETALUM CHINENSE 'PURPLE DAYDREAM' DWARF FRINGEFLOWER	5 GAL.
	24	ILEX VOMITORIA 'NANA' DWARF YAUPON HOLLY	5 GAL
	16	NANDINA DOMESTICA ' HARBOUR DWARF' HARBOUR DWARF NANDINA	5 GAL

SMALL SHRUBS	QTY	BOTANICAL / COMMON NAME	CONT
	49	BERBERIS THUN. 'CRIMSON PYGMY" CRIMSON PYGMY BARBERRY	5 GAL.
	34	HESPERALOE PARVIFLORA RED YUCCA	3 GAL
	63	LANTANA X `NEW GOLD` NEW GOLD LANTANA	5 GAL
	32	LANTANA MONTEVIDENSIS CREEPING LANTANA	5 GAL

ORNAMENTAL GRASSES	QTY	BOTANICAL / COMMON NAME	CONT
	32	MUHLENBERGIA RIGENS DEER GRASS	5 GAL

GROUND COVER	QTY	BOTANICAL / COMMON NAME	CONT
	53	RUELLIA BRITTONIANA 'KATIE' KATIE'S DWARF PETUNIA	3 GAL
	12,745 SF	CYNODON 'TIF-TUF' TIF-TUF HYBRID BERMUDA GRASS	SOD
	38,885 SF	BLACKLAND PRAIRIE SEED MIX NATIVE AMERICAN SEED (SEEDSOURCE.COM)	HYDROSEED

MULCHES

AFTER ALL PLANTING IS COMPLETE, CONTRACTOR SHALL INSTALL 3" THICK LAYER OF 1-1/2" SHREDDED WOOD MULCH, NATURAL (UNDYED). IN ALL PLANTING AREAS (EXCEPT FOR TURF AND SEEDED AREAS). CONTRACTOR SHALL SUBMIT SAMPLES OF ALL MULCHES TO LANDSCAPE ARCHITECT AND OWNER FOR APPROVAL PRIOR TO CONSTRUCTION. ABSOLUTELY NO EXPOSED GROUND SHALL BE LEFT SHOWING ANYWHERE ON THE PROJECT AFTER MULCH HAS BEEN INSTALLED (SUBJECT TO THE CONDITIONS AND REQUIREMENTS OF THE "GENERAL GRADING AND PLANTING NOTES" AND SPECIFICATIONS).

ROOT BARRIERS

THE CONTRACTOR SHALL INSTALL ROOT BARRIERS NEAR ALL NEWLY-PLANTED TREES THAT ARE LOCATED WITHIN FIVE (5) FEET OF PAVING OR CURBS. ROOT BARRIERS SHALL BE "CENTURY" OR "DEEP-ROOT" 24" DEEP PANELS (OR EQUAL). BARRIERS SHALL BE LOCATED IMMEDIATELY ADJACENT TO HARDSCAPE. INSTALL PANELS PER MANUFACTURER'S RECOMMENDATIONS. UNDER NO CIRCUMSTANCES SHALL THE CONTRACTOR USE ROOT BARRIERS OF A TYPE THAT COMPLETELY ENCIRCLE THE ROOTBALL.

UTILITY SCREENING NOTE:
GROUND MOUNTED EQUIPMENT AND AIR CONDITIONING UNITS SHALL BE SCREENED UTILIZING PLANTINGS, BERMS, WALLS MATCHING THE MAIN STRUCTURE, OR AN ARCHITECTURAL FEATURE THAT IS INTEGRAL TO THE BUILDING'S DESIGN.

LANDSCAPE STANDARDS

05.01 LANDSCAPE BUFFERS - NON-RESIDENTIAL

REQ. ABUTTING A PUBLIC RIGHT-OF-WAY:	15' WIDE BUFFER REQ. W/ 2 CANOPY + 4 ACCENT TREE PER 100 LIN. FT. OF FRONTAGE; GROUND COVER, BUILT-UP BERM AND SHRUBBERY ALONG ENTIRE FRONTAGE, 30" HIGH, MIN.- 48" MAX. HT.
JOHN KING BLVD.: REQUIRED PLANTING: PROVIDED 15' BUFFER:	±344.8' STREET FRONTAGE 7 CANOPY TREES, 14 ACCENT TREES, BERM W/ SHRUBS 7 NEW CANOPY TREES, 14 ACCENT TREES W/ BERM AND SHRUBS (30" HIGH MIN.)
ST. HWY. 276 OVERLAY DISTRICT: ±167.8 STREET FRONTAGE	15' WIDE LANDSCAPE BUFFER W/ GR. COVER, BUILT-UP BERM & SHRUBS (30" MIN.-48" MAX) ALONG ENTIRE LENGTH OF FRONTAGE. 2 CANOPY TREES + 4 ACCENT TREES PER 100 LIN. FEET OF FRONTAGE
REQUIRED PLANTING: PROVIDED 15' BUFFER:	3 CANOPY TREES, 7 ACCENT TREES, BERM W/ SHRUBS UNABLE TO PROVIDE REQ. TREES IN BUFFER DUE TO EASEMENTS & UNDERGROUND UTILITIES (WATER, STORM, SANITARY), 10 LG SHRUBS (SUBSTITUTED FOR 7 ACCENT TREES) PLACED IN BUFFER W/ BERM & SHRUBS (30" HI MIN.-48" MAX.) PLACED IN BUFFER
EAST PROPERTY LINE BUFFER:	NOT REQUIRED. PROPERTY ZONED PD-10
NORTH PROPERTY LINE BUFFER:	NOT REQUIRED. PROPERTY ZONED LIGHT INDUSTRIAL

05.02 LANDSCAPE SCREENING

REQ. HEADLIGHT SCREENING	NOT APPLICABLE
SCREENING FROM RESIDENTIAL	NOT APPLICABLE

05.03 LANDSCAPE REQUIREMENTS - COMMERCIAL (C) DISTRICT

TOTAL SITE AREA:	±160,353 SF
LANDSCAPE AREA REQUIRED TOTAL SITE:	32,071 SF (20%)
LANDSCAPE PROVIDED, TOTAL SITE:	±58,742 SF (36.6%)
LOCATION OF LANDSCAPING:	MIN. 50% OF REQ. LANDSCAPING SHALL BE LOCATED IN THE FRONT OF & ALONG THE SIDE OF BUILDINGS W/ STREET FRONTAGE.
LANDSCAPE AREAS IN FRONT & SIDES OF BUILDINGS:	±40,718 SF (69%)
MIN. SIZE OF AREAS:	ALL REQ. LANDSCAPING SHALL BE NO LESS THAN 5' WIDE AND A MIN. OF 25 SF IN AREA
DETENTION BASIN (XERISCAPE OPTION):	MIN. (1) SHRUB/ORNAMENTAL GRASS PER 750 SF OF DRY LAND AREA
PROPOSED DETENTION BASIN LANDSCAPING:	5,649 / 750 = 8 SHRUBS + NATIVE GRASSES
PARKING LOT LANDSCAPING	MIN. 5% OR 200 SF OF LANDSCAPING, WHICHEVER IS GREATER, IN THE INTERIOR OF PARKING LOT AREA.
PROPOSED PARKING AREA:	±29,004 SF
REQ. PARKING LOT LANDSCAPING:	±1,450 SF (29,004 x 5%) AND (1) LG. CANOPY TREE
FOR	EVERY 10 PARKING SPACES INTERNAL TO PARKING AREAS (PARKING AREA OVER 20,000 SF) REQ. PARKING SPACES MUST BE WITHIN 80' OF A CANOPY TREE TRUNK
PROPOSED PARKING LOT LANDSCAPING:	±1,528 SF (5%)
	34 PARKING SPACES / 10 = 3 TREES
TREES PROVIDED:	5 CANOPY TREES

SITE DATA TABLE

EXISTING USE:	VACANT	
PROPOSED USE:	MINI-WAREHOUSE & OFFICE SUITES	
EXISTING ZONING DISTRICT:	PLANNED DEVELOPMENT (PD-10)	
SITE AREA (LOT 2):	3.682 AC (160,388 SF)	
SITE AREA (LOT 3):	2.565 AC (111,719 SF)	
TOTAL SITE AREA:	6.247 AC (272,107 SF)	
FOR LOT 2 ONLY		
BUILDING AREA	MINI-WAREHOUSE	OFFICE SUITES
BUILDING A (3 STORIES):	69,250 SF	4,400 SF
BUILDING B (1 STORY):	11,350 SF	0 SF
BUILDING C (1 STORY):	4,000 SF	0 SF
BUILDING D (1 STORY):	13,100 SF	3,000 SF
TOTAL BUILDING AREA:	105,100 SF	
TOTAL BUILDING FOOTPRINT AREA:	56,000 SF	
TOTAL STORAGE UNITS:	635 UNITS	
	REQUIRED	PROVIDED
MAXIMUM LOT COVERAGE:	96,233 SF (60%)	56,000 SF (35%)
FLOOR TO AREA RATIO:	4:1	0.66:1
MAXIMUM BUILDING HEIGHT:	60 FT	42 FT
LANDSCAPE AREA:	32,078 SF (20%)	58,982 SF (36.8%)
	MINI-WAREHOUSE	OFFICE SUITES
PARKING REQUIRED:	9 STALLS (3 STALLS + 1/100 UNITS)	25 STALLS (1/300 SF)
TOTAL PARKING REQUIRED:	34 STALLS	
TOTAL PARKING PROVIDED:	34 STALLS	

NOTE: PD-10 REQUIRES COMMERCIAL (C) ZONING STANDARDS TO BE FOLLOWED FOR A NON-RESIDENTIAL DEVELOPMENT.

TREE MITIGATION SUMMARY

TOTAL MITIGATION REQUIRED:	45.75"
MITIGATION PROVIDED BY PLANTING 4" CALIPER TREES (12) TO BE PLANTED ONSITE:	48.0"
MITIGATION PROVIDED BY PURCHASING PRESERVATION CREDITS (20% OF TOTAL):	0"
TOTAL MITIGATION PROVIDED:	48.0"

CONTACT 811 BEFORE YOU DIG
811
SAFE DIGGING PARTNER

APPROVED:
I HEREBY CERTIFY THAT THE ABOVE AND FOREGOING SITE PLAN FOR A DEVELOPMENT IN THE CITY OF ROCKWALL, TEXAS, WAS APPROVED BY THE PLANNING & ZONING COMMISSION OF THE CITY OF ROCKWALL ON THE _____ DAY OF _____, _____

WITNESS OUR HANDS, THIS _____ DAY OF _____, _____

PLANNING & ZONING COMMISSION, CHAIRMAN

DIRECTOR OF PLANNING AND ZONING

NO.	DATE	REVISION

TEL: 214.295.5775
URBAN STRUCTURE
8140 Walnut Hill Lane, Suite 905
Dallas, Texas 75231
Firm Registration #F-12252
www.urbanstruct.com

REGISTERED LANDSCAPE ARCHITECT
STEPHEN W. SALES
3470
STATE OF TEXAS
01/17/2025

PROJECT:

ADVANTAGE STORAGE
1701 STATE HIGHWAY 276
OUT OF THE JAMES M. ALLEN SURVEY, ABSTRACT NO. 2
CITY OF ROCKWALL, ROCKWALL COUNTY, TEXAS

SHEET TITLE:
LANDSCAPE PLANTING PLAN

PREPARED ON:	07/14/2022
CLIENT:	ADVANTAGE STORAGE
DRAWN BY:	LL
DESIGNER:	LL
REVIEWER:	BP
U.S. PROJECT:	22577

SHEET
LP-1

CITY CASE NO. ######

PLANTING SPECIFICATIONS

GENERAL

A. QUALIFICATIONS OF LANDSCAPE CONTRACTOR
1. ALL LANDSCAPE WORK SHOWN ON THESE PLANS SHALL BE PERFORMED BY A SINGLE FIRM SPECIALIZING IN LANDSCAPE PLANTING.
2. A LIST OF SUCCESSFULLY COMPLETED PROJECTS OF THIS TYPE, SIZE AND NATURE MAY BE REQUESTED BY THE OWNER FOR FURTHER QUALIFICATION MEASURES.
3. THE LANDSCAPE CONTRACTOR SHALL HOLD A VALID NURSERY AND FLORAL CERTIFICATE ISSUED BY THE TEXAS DEPARTMENT OF AGRICULTURE, AS WELL AS OPERATE UNDER A COMMERCIAL PESTICIDE APPLICATOR LICENSE ISSUED BY EITHER THE TEXAS DEPARTMENT OF AGRICULTURE OR THE TEXAS STRUCTURAL PEST CONTROL BOARD.

B. SCOPE OF WORK
1. WORK COVERED BY THESE SECTIONS INCLUDES THE FURNISHING AND PAYMENT OF ALL MATERIALS, LABOR, SERVICES, EQUIPMENT, LICENSES, TAXES AND ANY OTHER ITEMS THAT ARE NECESSARY FOR THE EXECUTION, INSTALLATION AND COMPLETION OF ALL WORK, SPECIFIED HEREIN AND / OR SHOWN ON THE LANDSCAPE PLANS, NOTES, AND DETAILS.
2. ALL WORK SHALL BE PERFORMED IN ACCORDANCE WITH ALL APPLICABLE LAWS, CODES AND REGULATIONS REQUIRED BY AUTHORITIES HAVING JURISDICTION OVER SUCH WORK, INCLUDING ALL INSPECTIONS AND PERMITS REQUIRED BY FEDERAL, STATE AND LOCAL AUTHORITIES IN SUPPLY, TRANSPORTATION AND INSTALLATION OF MATERIALS.
3. THE LANDSCAPE CONTRACTOR SHALL VERIFY THE LOCATION OF ALL UNDERGROUND UTILITY LINES (WATER, SEWER, ELECTRICAL, TELEPHONE, GAS, CABLE, TELEVISION, ETC.) PRIOR TO THE START OF ANY WORK.

PRODUCTS

A. ALL MANUFACTURED PRODUCTS SHALL BE NEW.
B. CONTAINER AND BALLED-AND-BURLAPPED PLANTS:
1. FURNISH NURSERY-GROWN PLANTS COMPLYING WITH ANSI Z60.1-2014. PROVIDE WELL-SHAPED, FULLY BRANCHED, HEALTHY, VIGOROUS STOCK FREE OF DISEASE, INSECTS, EGGS, LARVAE, AND DEFECTS SUCH AS KNOTS, SUN SCALD, INJURIES, ABRASIONS, AND DISFIGUREMENT. ALL PLANTS WITHIN A SPECIES SHALL HAVE SIMILAR SIZE, AND SHALL BE OF A FORM TYPICAL FOR THE SPECIES. ALL TREES SHALL BE OBTAINED FROM SOURCES WITHIN 200 MILES OF THE PROJECT SITE, AND WITH SIMILAR CLIMACTIC CONDITIONS.
2. ROOT SYSTEMS SHALL BE HEALTHY, DENSELY BRANCHED ROOT SYSTEMS, NON-POT-BOUND, FREE FROM ENCIRCLING AND/OR GIRDLING ROOTS, AND FREE FROM ANY OTHER ROOT DEFECTS (SUCH AS J-SHAPED ROOTS).
3. TREES MAY BE PLANTED FROM CONTAINERS OR BALLED-AND-BURLAPPED (B&B), UNLESS SPECIFIED ON THE PLANTING LEGEND. BARE-ROOT TREES ARE NOT ACCEPTABLE.
4. ANY PLANT DEEMED UNACCEPTABLE BY THE LANDSCAPE ARCHITECT OR OWNER SHALL BE IMMEDIATELY REMOVED FROM THE SITE AND SHALL BE REPLACED WITH AN ACCEPTBLE PLANT OF LIKE TYPE AND SIZE AT THE CONTRACTOR'S OWN EXPENSE. ANY PLANTS APPEARING TO BE UNHEALTHY, EVEN IF DETERMINED TO STILL BE ALIVE, SHALL NOT BE ACCEPTED. THE LANDSCAPE ARCHITECT AND OWNER SHALL BE THE SOLE JUDGES AS TO THE ACCEPTABILITY OF PLANT MATERIAL.
5. ALL TREES SHALL BE STANDARD IN FORM, UNLESS OTHERWISE SPECIFIED. TREES WITH CENTRAL LEADERS WILL NOT BE ACCEPTED IF LEADER IS DAMAGED OR REMOVED. PRUNE ALL DAMAGED TWIGS AFTER PLANTING.
6. CALIPER MEASUREMENTS FOR STANDARD (SINGLE TRUNK) TREES SHALL BE AS FOLLOWS: SIX INCHES ABOVE THE ROOT FLARE FOR TREES UP TO AND INCLUDING FOUR INCHES IN CALIPER, AND TWELVE INCHES ABOVE THE ROOT FLARE FOR TREES EXCEEDING FOUR INCHES IN CALIPER.
7. MULTI-TRUNK TREES SHALL BE MEASURED BY THEIR OVERALL HEIGHT, MEASURED FROM THE TOP OF THE ROOT BALL. WHERE CALIPER MEASUREMENTS ARE USED, THE CALIPER SHALL BE CALCULATED AS ONE-HALF OF THE SUM OF THE CALIPER OF THE THREE LARGEST TRUNKS.
8. ANY TREE OR SHRUB SHOWN TO HAVE EXCESS SOIL PLACED ON TOP OF THE ROOT BALL, SO THAT THE ROOT FLARE HAS BEEN COMPLETELY COVERED, SHALL BE REJECTED.

C. SOD: PROVIDE WELL-ROOTED SOD OF THE VARIETY NOTED ON THE PLANS. SOD SHALL BE CUT FROM HEALTHY, MATURE TURF WITH SOIL THICKNESS OF 3/4" TO 1". EACH PALLET OF SOD SHALL BE ACCOMPANIED BY A CERTIFICATE FROM SUPPLIER STATING THE COMPOSITION OF THE SOD.
D. TOPSOIL: SANDY TO CLAY LOAM TOPSOIL, FREE OF STONES LARGER THAN ½ INCH, FOREIGN MATTER, PLANTS, ROOTS, AND SEEDS.
E. COMPOST: WELL-COMPOSTED, STABLE, AND WEED-FREE ORGANIC MATTER, pH RANGE OF 5.5 TO 8; MOISTURE CONTENT 35 TO 55 PERCENT BY WEIGHT; 100 PERCENT PASSING THROUGH 3/4-INCH SIEVE; SOLUBLE SALT CONTENT OF 5 TO 10 DECISIEMENS/M; NOT EXCEEDING 0.5 PERCENT INERT CONTAMINANTS AND FREE OF SUBSTANCES TOXIC TO PLANTINGS. NO MANURE OR ANIMAL-BASED PRODUCTS SHALL BE USED.
F. FERTILIZER: GRANULAR FERTILIZER CONSISTING OF NITROGEN, PHOSPHORUS, POTASSIUM, AND OTHER NUTRIENTS IN PROPORTIONS, AMOUNTS, AND RELEASE RATES RECOMMENDED IN A SOIL REPORT FROM A QUALIFIED SOIL-TESTING AGENCY (SEE BELOW).
G. MULCH: SIZE AND TYPE AS INDICATED ON PLANS, FREE FROM DELETERIOUS MATERIALS AND SUITABLE AS A TOP DRESSING OF TREES AND SHRUBS.
H. TREE STAKING AND GUYING
1. STAKES: 6' LONG GREEN METAL T-POSTS.
2. GUY AND TIE WIRE: ASTM A 641, CLASS 1, GALVANIZED-STEEL WIRE, 2-STRAND, TWISTED, 0.106 INCH DIAMETER.
3. STRAP CHAFING GUARD: REINFORCED NYLON OR CANVAS AT LEAST 1-1/2 INCH WIDE, WITH GROMMETS TO PROTECT TREE TRUNKS FROM DAMAGE.

I. STEEL EDGING: PROFESSIONAL STEEL EDGING, 14 GAUGE THICK X 4 INCHES WIDE, FACTORY PAINTED DARK GREEN. ACCEPTABLE MANUFACTURERS INCLUDE COL-MET OR APPROVED EQUAL.
J. PRE-EMERGENT HERBICIDES: ANY GRANULAR, NON-STAINING PRE-EMERGENT HERBICIDE THAT IS LABELED FOR THE SPECIFIC ORNAMENTALS OR TURF ON WHICH IT WILL BE UTILIZED. PRE-EMERGENT HERBICIDES SHALL BE APPLIED PER THE MANUFACTURER'S LABELED RATES.

METHODS

A. SOIL PREPARATION
1. BEFORE STARTING WORK, THE LANDSCAPE CONTRACTOR SHALL VERIFY THAT THE GRADE OF ALL LANDSCAPE AREAS ARE WITHIN +/-0.1' OF FINISH GRADE. THE CONTRACTOR SHALL NOTIFY THE OWNER IMMEDIATELY SHOULD ANY DISCREPANCIES EXIST.
2. SOIL TESTING:
a. AFTER FINISH GRADES HAVE BEEN ESTABLISHED, CONTRACTOR SHALL HAVE SOIL SAMPLES FROM THE PROJECT'S LANDSCAPE AREAS TESTED BY AN ESTABLISHED SOIL TESTING LABORATORY. EACH SAMPLE SUBMITTED TO THE LAB SHALL CONTAIN NO LESS THAN ONE QUART OF SOIL, TAKEN FROM BETWEEN THE SOIL SURFACE AND 6" DEPTH. IF NO SAMPLE LOCATIONS ARE INDICATED ON THE PLANS, THE CONTRACTOR SHALL TAKE A MINIMUM OF THREE SAMPLES FROM VARIOUS REPRESENTATIVE LOCATIONS FOR TESTING.
b. THE CONTRACTOR SHALL HAVE THE SOIL TESTING LABORATORY PROVIDE RESULTS FOR THE FOLLOWING: SOIL TEXTURAL CLASS, GENERAL SOIL FERTILITY, pH, ORGANIC MATTER CONTENT, SALT (CEC), LIME, SODIUM ADSORPTION RATIO (SAR) AND BORON CONTENT.
c. THE CONTRACTOR SHALL ALSO SUBMIT THE PROJECT'S PLANT LIST TO THE LABORATORY ALONG WITH THE SOIL SAMPLES.
d. THE SOIL REPORT PRODUCED BY THE LABORATORY SHALL CONTAIN RECOMMENDATIONS FOR THE FOLLOWING (AS APPROPRIATE): SEPARATE SOIL PREPARATION AND BACKFILL MIX RECOMMENDATIONS FOR GENERAL ORNAMENTAL PLANTS, XERIC PLANTS, TURF, AND NATIVE SEED, AS WELL AS PRE-PLANT FERTILIZER APPLICATIONS AND RECOMMENDATIONS FOR ANY OTHER SOIL RELATED ISSUES. THE REPORT SHALL ALSO PROVIDE A FERTILIZER PROGRAM FOR THE ESTABLISHMENT PERIOD AND FOR LONG-TERM MAINTENANCE.
3. THE CONTRACTOR SHALL INSTALL SOIL AMENDMENTS AND FERTILIZERS PER THE SOILS REPORT RECOMMENDATIONS. ANY CHANGE IN COST DUE TO THE SOIL REPORT RECOMMENDATIONS, EITHER INCREASE OR DECREASE, SHALL BE SUBMITTED TO THE OWNER WITH THE REPORT.
4. FOR BIDDING PURPOSES ONLY, THE SOIL PREPARATION SHALL CONSIST OF THE FOLLOWING:
a. TURF: INCORPORATE THE FOLLOWING AMENDMENTS INTO THE TOP 8" OF SOIL BY MEANS OF ROTOTILLING AFTER CROSS-RIPPING:
i. NITROGEN STABILIZED ORGANIC AMENDMENT - 4 CU. YDS. PER 1,000 S.F.
ii. PREPLANT TURF FERTILIZER (10-20-10 OR SIMILAR, SLOW RELEASE, ORGANIC) - 15 LBS PER 1,000 S.F.
iii. "CLAY BUSTER" OR EQUAL - USE MANUFACTURER'S RECOMMENDED RATE
b. TREES, SHRUBS, AND PERENNIALS: INCORPORATE THE FOLLOWING AMENDMENTS INTO THE TOP 8" OF SOIL BY MEANS OF ROTOTILLING AFTER CROSS-RIPPING:
i. NITROGEN STABILIZED ORGANIC AMENDMENT - 4 CU. YDS. PER 1,000 S.F.
ii. 12-12-12 FERTILIZER (OR SIMILAR, ORGANIC, SLOW RELEASE) - 10 LBS. PER CU. YD.
iii. "CLAY BUSTER" OR EQUAL - USE MANUFACTURER'S RECOMMENDED RATE
iv. IRON SULPHATE - 2 LBS. PER CU. YD.
5. IN THE CONTEXT OF THESE PLANS, NOTES, AND SPECIFICATIONS, "FINISH GRADE" REFERS TO THE FINAL ELEVATION OF THE SOIL SURFACE (NOT TOP OF MULCH) AS INDICATED ON THE GRADING PLANS.
a. BEFORE STARTING WORK, THE LANDSCAPE CONTRACTOR SHALL VERIFY THAT THE ROUGH GRADES OF ALL LANDSCAPE AREAS ARE WITHIN +/-0.1' OF FINISH GRADE. SEE SPECIFICATIONS FOR MORE DETAILED INSTRUCTION ON TURF AREA AND PLANTING BED PREPARATION.
b. CONSTRUCT AND MAINTAIN FINISH GRADES AS SHOWN ON GRADING PLANS, AND CONSTRUCT AND MAINTAIN SLOPES AS RECOMMENDED BY THE GEOTECHNICAL REPORT. ALL LANDSCAPE AREAS SHALL HAVE POSITIVE DRAINAGE AWAY FROM STRUCTURES AT THE MINIMUM SLOPE SPECIFIED IN THE REPORT AND ON THE GRADING PLANS, AND AREAS OF POTENTIAL PONDING SHALL BE REGRADED TO BLEND IN WITH THE SURROUNDING GRADES AND ELIMINATE PONDING POTENTIAL.
c. THE LANDSCAPE CONTRACTOR SHALL DETERMINE WHETHER OR NOT THE EXPORT OF ANY SOIL WILL BE NEEDED, TAKING INTO ACCOUNT THE ROUGH GRADE PROVIDED, THE AMOUNT OF SOIL AMENDMENTS TO BE ADDED (**BASED ON A SOIL TEST**, PER SPECIFICATIONS), AND THE FINISH GRADES TO BE ESTABLISHED.
d. ENSURE THAT THE FINISH GRADE IN SHRUB AREAS IMMEDIATELY ADJACENT TO WALKS AND OTHER WALKING SURFACES, AFTER INSTALLING SOIL AMENDMENTS, IS 3" BELOW THE ADJACENT FINISH SURFACE, IN ORDER TO ALLOW FOR PROPER MULCH DEPTH. TAPER THE SOIL SURFACE TO MEET FINISH GRADE, AS SPECIFIED ON THE GRADING PLANS, AT APPROXIMATELY 18" AWAY FROM THE WALKS.
e. ENSURE THAT THE FINISH GRADE IN TURF AREAS IMMEDIATELY ADJACENT TO WALKS AND OTHER WALKING SURFACES, AFTER INSTALLING SOIL AMENDMENTS, IS 1" BELOW THE FINISH SURFACE OF THE WALKS. TAPER THE SOIL SURFACE TO MEET FINISH GRADE, AS SPECIFIED ON THE GRADING PLANS, AT APPROXIMATELY 18" AWAY FROM THE WALKS.
f. SHOULD ANY CONFLICTS AND/OR DISCREPANCIES ARISE BETWEEN THE GRADING PLANS, GEOTECHNICAL REPORT, THESE NOTES AND PLANS, AND ACTUAL CONDITIONS, THE CONTRACTOR SHALL IMMEDIATELY BRING SUCH ITEMS TO THE ATTENTION OF THE LANDSCAPE ARCHITECT, GENERAL CONTRACTOR, AND OWNER.
6. ONCE SOIL PREPARATION IS COMPLETE, THE LANDSCAPE CONTRACTOR SHALL ENSURE THAT THERE ARE NO DEBRIS, TRASH, OR STONES LARGER THAN 1" REMAINING IN THE TOP 6" OF SOIL.

B. SUBMITTALS
1. THE CONTRACTOR SHALL PROVIDE SUBMITTALS AND SAMPLES, IF REQUIRED, TO THE LANDSCAPE ARCHITECT, AND RECEIVE APPROVAL IN WRITING FOR SUCH SUBMITTALS BEFORE WORK COMMENCES.
2. SUBMITTALS SHALL INCLUDE PHOTOS OF PLANTS WITH A RULER OR MEASURING STICK FOR SCALE, PHOTOS OR SAMPLES OF ANY REQUIRED MULCHES, AND SOIL TEST RESULTS AND PREPARATION RECOMMENDATIONS FROM THE TESTING LAB (INCLUDING COMPOST AND FERTILIZER RATES AND TYPES, AND OTHER AMENDMENTS FOR TREE/SHRUB, TURF, AND SEED AREAS AS MAY BE APPROPRIATE).
3. SUBMITTALS SHALL ALSO INCLUDE MANUFACTURER CUT SHEETS FOR PLANTING ACCESSORIES SUCH AS TREE STAKES AND TIES, EDGING, AND LANDSCAPE FABRICS (IF ANY).
4. WHERE MULTIPLE ITEMS ARE SHOWN ON A PAGE, THE CONTRACTOR SHALL CLEARLY INDICATE THE ITEM BEING CONSIDERED.

C. GENERAL PLANTING
1. REMOVE ALL NURSERY TAGS AND STAKES FROM PLANTS.
2. EXCEPT IN AREAS TO BE PLANTED WITH ORNAMENTAL GRASSES, APPLY PRE-EMERGENT HERBICIDES AT THE MANUFACTURER'S RECOMMENDED RATE.
3. TRENCHING NEAR EXISTING TREES:
a. CONTRACTOR SHALL NOT DISTURB ROOTS 1-1/2" AND LARGER IN DIAMETER WITHIN THE CRITICAL ROOT ZONE (CRZ) OF EXISTING TREES, AND SHALL EXERCISE ALL POSSIBLE CARE AND PRECAUTIONS TO AVOID INJURY TO TREE ROOTS, TRUNKS, AND BRANCHES. THE CRZ IS DEFINED AS A CIRCULAR AREA EXTENDING OUTWARD FROM THE TREE TRUNK, WITH A RADIUS EQUAL TO 1' FOR EVERY 1" OF TRUNK DIAMETER-AT-BREAST-HEIGHT (4.5' ABOVE THE AVERAGE GRADE AT THE TRUNK).
b. ALL EXCAVATION WITHIN THE CRZ SHALL BE PERFORMED USING HAND TOOLS. NO MACHINE EXCAVATION OR TRENCHING OF ANY KIND SHALL BE ALLOWED WITHIN THE CRZ.
c. ALTER ALIGNMENT OF PIPE TO AVOID TREE ROOTS 1-1/2" AND LARGER IN DIAMETER. WHERE TREE ROOTS 1-1/2" AND LARGER IN DIAMETER ARE ENCOUNTERED IN THE FIELD, TUNNEL UNDER SUCH ROOTS. WRAP EXPOSED ROOTS WITH SEVERAL LAYERS OF BURLAP AND KEEP MOIST. CLOSE ALL TRENCHES WITHIN THE CANOPY DRIP LINES WITHIN 24 HOURS.
d. ALL SEVERED ROOTS SHALL BE HAND PRUNED WITH SHARP TOOLS AND ALLOWED TO AIR-DRY. DO NOT USE ANY SORT OF SEALERS OR WOUND PAINTS.

D. TREE PLANTING
1. TREE PLANTING HOLES SHALL BE EXCAVATED TO MINIMUM WIDTH OF TWO TIMES THE WIDTH OF THE ROOTBALL, AND TO A DEPTH EQUAL TO THE DEPTH OF THE ROOTBALL LESS TWO TO FOUR INCHES.
2. SCARIFY THE SIDES AND BOTTOM OF THE PLANTING HOLE PRIOR TO THE PLACEMENT OF THE TREE. REMOVE ANY GLAZING THAT MAY HAVE BEEN CAUSED DURING THE EXCAVATION OF THE HOLE.
3. FOR CONTAINER AND BOX TREES, TO REMOVE ANY POTENTIALLY GIRDLING ROOTS AND OTHER ROOT DEFECTS, THE CONTRACTOR SHALL SHAVE A 1" LAYER OFF OF THE SIDES AND BOTTOM OF THE ROOTBALL OF ALL TREES JUST BEFORE PLACING INTO THE PLANTING PIT. DO NOT "TEASE" ROOTS OUT FROM THE ROOTBALL.
4. INSTALL THE TREE ON UNDISTURBED SUBGRADE SO THAT THE TOP OF THE ROOTBALL IS TWO TO FOUR INCHES ABOVE THE SURROUNDING GRADE.
5. BACKFILL THE TREE HOLE UTILIZING THE EXISTING TOPSOIL FROM ON-SITE. ROCKS LARGER THAN 1" DIA. AND ALL OTHER DEBRIS SHALL BE REMOVED FROM THE SOIL PRIOR TO THE BACKFILL. SHOULD ADDITIONAL SOIL BE REQUIRED TO ACCOMPLISH THIS TASK, USE STORED TOPSOIL FROM ON-SITE OR IMPORT ADDITIONAL TOPSOIL FROM OFF-SITE AT NO ADDITIONAL COST TO THE OWNER. IMPORTED TOPSOIL SHALL BE OF SIMILAR TEXTURAL CLASS AND COMPOSITION IN THE ON-SITE SOIL.
6. TREES SHALL NOT BE STAKED UNLESS LOCAL CONDITIONS (SUCH AS HEAVY WINDS OR SLOPES) REQUIRE STAKES TO KEEP TREES UPRIGHT. SHOULD STAKING BE REQUIRED, THE TOTAL NUMBER OF TREE STAKES (BEYOND THE MINIMUMS LISTED BELOW) WILL BE LEFT TO THE LANDSCAPE CONTRACTOR'S DISCRETION. SHOULD ANY TREES FALL OR LEAN, THE LANDSCAPE CONTRACTOR SHALL STRAIGHTEN THE TREE, OR REPLACE IT SHOULD IT BECOME DAMAGED. TREE STAKING SHALL ADHERE TO THE FOLLOWING GUIDELINES:
a. 1"-2" TREES — TWO STAKES PER TREE
b. 2-1/2"-4" TREES — THREE STAKES PER TREE
c. TREES OVER 4" CALIPER — GUY AS NEEDED
d. MULTI-TRUNK TREES — THREE STAKES PER TREE MINIMUM, QUANTITY AND POSITIONS AS NEEDED TO STABILIZE THE TREE
e. MULTI-TRUNK TREES — THREE STAKES PER TREE MINIMUM, QUANTITY AND POSITIONS AS NEEDED TO STABILIZE THE TREE
7. UPON COMPLETION OF PLANTING, CONSTRUCT AN EARTH WATERING BASIN AROUND THE TREE. COVER THE INTERIOR OF THE TREE RING WITH THE WEED BARRIER CLOTH AND TOPDRESS WITH MULCH (TYPE AND DEPTH PER PLANS).

E. SHRUB, PERENNIAL, AND GROUNDCOVER PLANTING
1. DIG THE PLANTING HOLES TWICE AS WIDE AND 2" LESS DEEP THAN EACH PLANT'S ROOTBALL. INSTALL THE PLANT IN THE HOLE. BACKFILL AROUND THE PLANT WITH SOIL AMENDED PER SOIL TEST RECOMMENDATIONS.
2. INSTALL THE WEED BARRIER CLOTH, OVERLAPPING IT AT THE ENDS. UTILIZE STEEL STAPLES TO KEEP THE WEED BARRIER CLOTH IN PLACE.
3. WHEN PLANTING IS COMPLETE, INSTALL MULCH (TYPE AND DEPTH PER PLANS) OVER ALL PLANTING BEDS, COVERING THE ENTIRE PLANTING AREA.

F. SODDING
1. SOD VARIETY TO BE AS SPECIFIED ON THE LANDSCAPE PLAN.
2. LAY SOD WITHIN 24 HOURS FROM THE TIME OF STRIPPING. DO NOT LAY IF THE GROUND IS FROZEN.
3. LAY THE SOD TO FORM A SOLID MASS WITH TIGHTLY FITTED JOINTS. BUTT ENDS AND SIDES OF SOD STRIPS - DO NOT OVERLAP. STAGGER STRIPS TO OFFSET JOINTS IN ADJACENT COURSES.
4. ROLL THE SOD TO ENSURE GOOD CONTACT OF THE SOD'S ROOT SYSTEM WITH THE SOIL UNDERNEATH.
5. WATER THE SOD THOROUGHLY WITH A FINE SPRAY IMMEDIATELY AFTER PLANTING TO OBTAIN AT LEAST SIX INCHES OF PENETRATION INTO THE SOIL BELOW THE SOD.

G. MULCH
1. INSTALL MULCH TOPDRESSING, TYPE AND DEPTH PER MULCH NOTE, IN ALL PLANTING AREAS AND TREE RINGS.
2. DO NOT INSTALL MULCH WITHIN 6" OF TREE ROOT FLARE AND WITHIN 24" OF HABITABLE STRUCTURES, EXCEPT AS MAY BE NOTED ON THESE PLANS. MULCH COVER WITHIN 6" OF CONCRETE WALKS AND CURBS SHALL NOT PROTRUDE ABOVE THE FINISH SURFACE OF THE WALKS AND CURBS. MULCH COVER WITHIN 12" OF WALLS SHALL BE AT LEAST 3" LOWER THAN THE TOP OF WALL.

H. CLEAN UP
1. DURING LANDSCAPE PREPARATION AND PLANTING, KEEP ALL PAVEMENT CLEAN AND ALL WORK AREAS IN A NEAT, ORDERLY CONDITION.
2. DISPOSED LEGALLY OF ALL EXCAVATED MATERIALS OFF THE PROJECT SITE.

I. INSPECTION AND ACCEPTANCE
1. UPON COMPLETION OF THE WORK, THE LANDSCAPE CONTRACTOR SHALL PROVIDE THE SITE CLEAN, FREE OF DEBRIS AND TRASH, AND SUITABLE FOR USE AS INTENDED. THE LANDSCAPE CONTRACTOR SHALL THEN REQUEST AN INSPECTION BY THE OWNER TO DETERMINE FINAL ACCEPTABILITY.
2. WHEN THE INSPECTED PLANTING WORK DOES NOT COMPLY WITH THE CONTRACT DOCUMENTS, THE LANDSCAPE CONTRACTOR SHALL REPLACE AND/OR REPAIR THE REJECTED WORK TO THE OWNER'S SATISFACTION WITHIN 24 HOURS.
3. THE LANDSCAPE MAINTENANCE PERIOD WILL NOT COMMENCE UNTIL THE LANDSCAPE WORK HAS BEEN RE-INSPECTED BY THE OWNER AND FOUND TO BE ACCEPTABLE. AT THAT TIME, A WRITTEN NOTICE OF FINAL ACCEPTANCE WILL BE ISSUED BY THE OWNER, AND THE MAINTENANCE AND GUARANTEE PERIODS WILL COMMENCE.

J. LANDSCAPE MAINTENANCE
1. THE LANDSCAPE CONTRACTOR SHALL BE RESPONSIBLE FOR THE MAINTENANCE OF ALL WORK SHOWN ON THESE PLANS FOR 90 DAYS BEYOND FINAL ACCEPTANCE OF ALL LANDSCAPE WORK BY THE OWNER. LANDSCAPE MAINTENANCE SHALL INCLUDE WEEKLY SITE VISITS FOR THE FOLLOWING ACTIONS (AS APPROPRIATE): PROPER PRUNING, RESTAKING OF TREES, RESETTING OF PLANTS THAT HAVE SETTLED, MOWING AND AERATION OF LAWNS, WEEDING, TREATING FOR INSECTS AND DISEASES,REPLACEMENT OF MULCH, REMOVAL OF LITTER, REPAIRS TO THE IRRIGATION SYSTEM DUE TO FAULTY PARTS AND/OR WORKMANSHIP, AND THE APPROPRIATE WATERING OF ALL PLANTINGS. THE LANDSCAPE CONTRACTOR SHALL MAINTAIN THE IRRIGATION SYSTEM IN PROPER WORKING ORDER, WITH SCHEDULING ADJUSTMENTS BY SEASON TO MAXIMIZE WATER CONSERVATION.
2. SHOULD SEEDED AND/OR SODDED AREAS NOT BE COVERED BY AN AUTOMATIC IRRIGATION SYSTEM, THE LANDSCAPE CONTRACTOR SHALL BE RESPONSIBLE FOR WATERING THESE AREAS AND OBTAINING A FULL, HEALTHY STAND OF PLANTS AT NO ADDITIONAL COST TO THE OWNER.
3. TO ACHIEVE FINAL ACCEPTANCE AT THE END OF THE MAINTENANCE PERIOD, ALL OF THE FOLLOWING CONDITIONS MUST OCCUR:
a. THE LANDSCAPE SHALL SHOW ACTIVE, HEALTHY GROWTH (WITH EXCEPTIONS MADE FOR SEASONAL DORMANCY). ALL PLANTS NOT MEETING THIS CONDITION SHALL BE REJECTED AND REPLACED BY HEALTHY PLANT MATERIAL PRIOR TO FINAL ACCEPTANCE.
b. ALL HARDSCAPE SHALL BE CLEANED PRIOR TO FINAL ACCEPTANCE.
c. SODDED AREAS MUST BE ACTIVELY GROWING AND MUST REACH A MINIMUM HEIGHT OF 1 1/2 INCHES BEFORE FIRST MOWING. BARE AREAS LARGER THAN TWELVE SQUARE INCHES MUST BE RESODDED (AS APPROPRIATE) PRIOR TO FINAL ACCEPTANCE. ALL SODDED TURF SHALL BE NEATLY MOWED.

K. WARRANTY PERIOD, PLANT GUARANTEE AND REPLACEMENTS
1. THE LANDSCAPE CONTRACTOR SHALL GUARANTEE ALL TREES, SHRUBS, PERENNIALS, SOD, AND IRRIGATION SYSTEMS FOR A PERIOD OF ONE YEAR FROM THE DATE OF THE OWNER'S FINAL ACCEPTANCE (90 DAYS FOR ANNUAL PLANTS). THE CONTRACTOR SHALL REPLACE, AT HIS OWN EXPENSE AND TO THE SATISFACTION OF THE OWNER, ANY PLANTS WHICH DIE IN THAT TIME, OR REPAIR ANY PORTIONS OF THE IRRIGATION SYSTEM WHICH OPERATE IMPROPERLY.
2. AFTER THE INITIAL MAINTENANCE PERIOD AND DURING THE GUARANTEE PERIOD, THE LANDSCAPE CONTRACTOR SHALL ONLY BE RESPONSIBLE FOR REPLACEMENT OF PLANTS WHEN PLANT DEATH CANNOT BE ATTRIBUTED DIRECTLY TO OVERWATERING OR OTHER DAMAGE BY HUMAN ACTIONS.

L. PROVIDE A MINIMUM OF (2) COPIES OF RECORD DRAWINGS TO THE OWNER UPON COMPLETION OF WORK. A RECORD DRAWING IS A RECORD OF ALL CHANGES THAT OCCURRED IN THE FIELD AND THAT ARE DOCUMENTED THROUGH CHANGE ORDERS, ADDENDA, OR CONTRACTOR/CONSULTANT DRAWING MARKUPS.

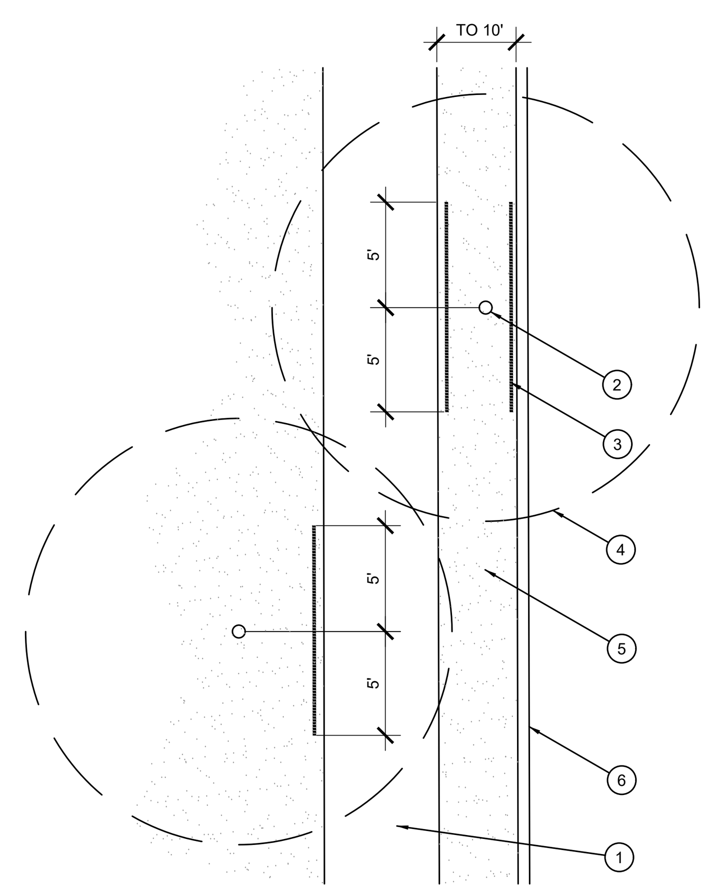

1. TYPICAL WALKWAY OR PAVING
2. TREE TRUNK
3. LINEAR ROOT BARRIER MATERIAL. SEE PLANTING NOTES FOR TYPE AND MANUFACTURER. INSTALL PER MANUFACTURER'S SPECIFICATIONS.
4. TREE CANOPY
5. TYPICAL PLANTING AREA
6. TYPICAL CURB AND GUTTER

NOTES:
1) INSTALL ROOT BARRIERS NEAR ALL NEWLY-PLANTED TREES THAT ARE LOCATED WITHIN FIVE (5) FEET OF PAVING OR CURBS.
2) BARRIERS SHALL BE LOCATED IMMEDIATELY ADJACENT TO HARDSCAPE. UNDER NO CIRCUMSTANCES SHALL THE CONTRACTOR USE ROOT BARRIERS OF A TYPE THAT COMPLETELY ENCIRCLE THE ROOTBALL.

D ROOT BARRIER - PLAN VIEW
SCALE: NOT TO SCALE

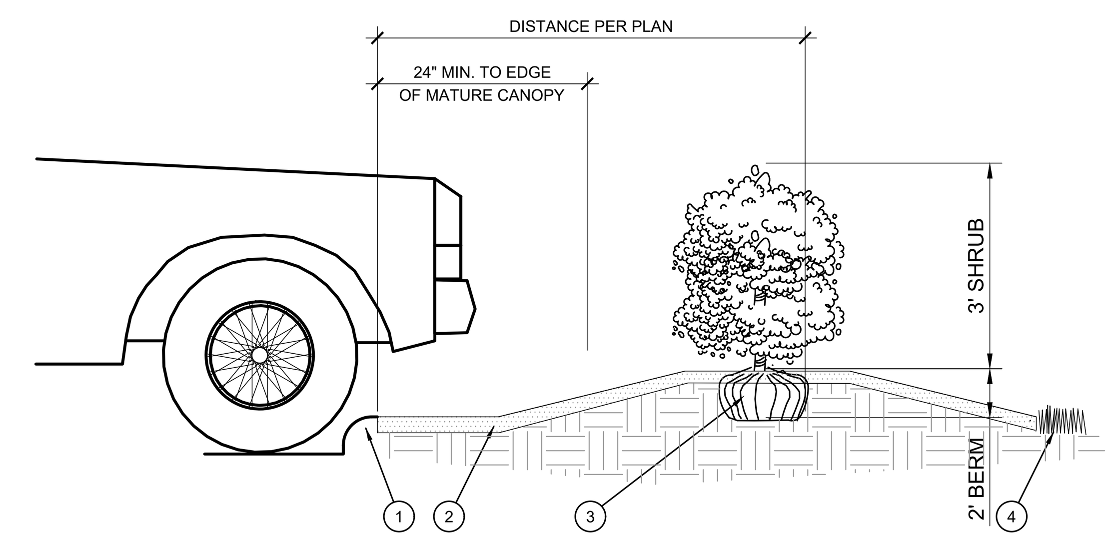

1. CURB.
2. MULCH LAYER.
3. PLANT.
4. TURF (WHERE SHOWN ON PLAN).

E PLANTING AT PARKING AREA
SCALE: NOT TO SCALE

IRRIGATION CONCEPT

1. AN AUTOMATIC IRRIGATION SYSTEM SHALL BE INSTALLED AND OPERATIONAL BY THE TIME OF FINAL INSPECTION. THE ENTIRE IRRIGATION SYSTEM SHALL BE INSTALLED BY A LICENSED AND QUALIFIED IRRIGATION CONTRACTOR.
2. THE IRRIGATION SYSTEM WILL OPERATE ON POTABLE WATER, AND THE SYSTEM WILL HAVE APPROPRIATE BACKFLOW PREVENTION DEVICES INSTALLED TO PREVENT CONTAMINATION OF THE POTABLE SOURCE.
3. ALL NON-TURF PLANTED AREAS SHALL BE DRIP IRRIGATED. SODDED AND SEEDED AREAS SHALL BE IRRIGATED WITH SPRAY OR ROTOR HEADS AT 100% HEAD-TO-HEAD COVERAGE.
4. ALL PLANTS SHARING SIMILAR HYDROZONE CHARACTERISTICS SHALL BE PLACED ON A VALVE DEDICATED TO PROVIDE THE NECESSARY WATER REQUIREMENTS SPECIFIC TO THAT HYDROZONE.
5. THE IRRIGATION SYSTEM SHALL BE DESIGNED AND INSTALLED, TO THE MAXIMUM EXTENT POSSIBLE, TO CONSERVE WATER BY USING THE FOLLOWING DEVICES AND SYSTEMS: MATCHED PRECIPITATION RATE TECHNOLOGY ON ROTOR AND SPRAY HEADS (WHEREVER POSSIBLE), RAIN SENSORS, AND MULTI-PROGRAM COMPUTERIZED IRRIGATION CONTROLLERS FEATURING SENSORY INPUT CAPABILITIES.
6. ALL IRRIGATION SHALL MEET THE REQUIREMENTS OF THE CITY OF ROCKWALL'S UDC (SUBSECTION 05.04, OF ARTICLE 08)

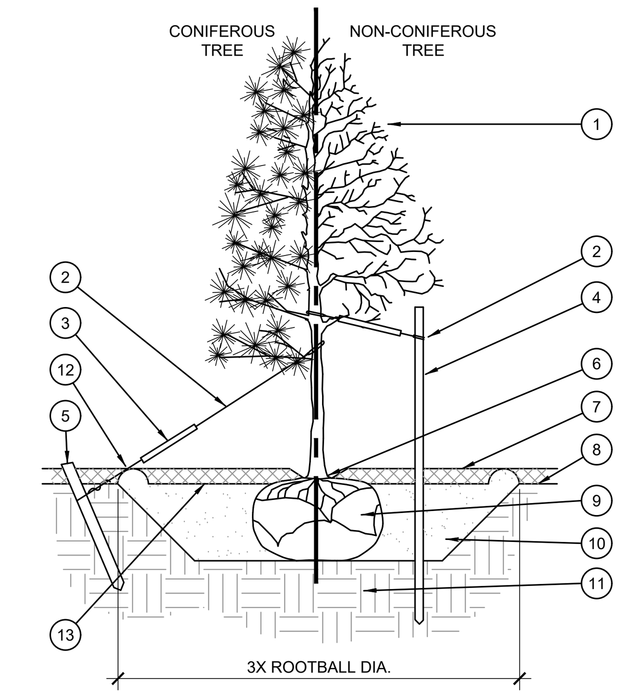

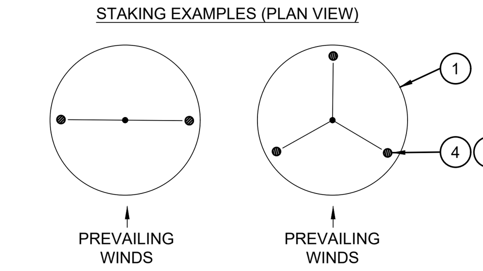

1. TREE CANOPY.
2. CINCH-TIES (24" BOX/2" CAL. TREES AND SMALLER) OR 12 GAUGE GALVANIZED WIRE WITH NYLON TREE STRAPS AT TREE AND STAKE (36" BOX/2.5" CAL. TREES AND LARGER). SECURE TIES OR STRAPS TO TRUNK JUST ABOVE LOWEST MAJOR BRANCHES.
3. 24" X 3/4" P.V.C. MARKERS OVER WIRES.
4. GREEN STEEL T-POSTS. EXTEND POSTS 12" MIN. INTO UNDISTURBED SOIL.
5. PRESSURE-TREATED WOOD DEADMAN, TWO PER TREE (MIN.). BURY OUTSIDE OF PLANTING PIT AND 18" MIN. INTO UNDISTURBED SOIL.
6. TRUNK FLARE.
7. MULCH, TYPE AND DEPTH PER PLANS. DO NOT PLACE MULCH WITHIN 6" OF TRUNK.
8. FINISH GRADE.
9. ROOT BALL.
10. BACKFILL. AMEND AND FERTILIZE ONLY AS RECOMMENDED IN SOIL FERTILITY ANALYSIS.
11. UNDISTURBED NATIVE SOIL.
12. 4" HIGH EARTHEN WATERING BASIN.
13. FINISH GRADE.

NOTES:
1. SCARIFY SIDES OF PLANTING PIT PRIOR TO SETTING TREE.
2. REMOVE EXCESS SOIL APPLIED ON TOP OF THE ROOTBALL THAT COVERS THE ROOT FLARE. THE PLANTING HOLE DEPTH SHALL BE SUCH THAT THE ROOTBALL RESTS ON UNDISTURBED SOIL, AND THE ROOT FLARE IS 2"-4" ABOVE FINISH GRADE.
3. FOR B&B TREES, CUT OFF BOTTOM 1/3 OF WIRE BASKET BEFORE PLACING TREE IN HOLE, CUT OFF AND REMOVE REMAINDER OF BASKET AFTER TREE IS SET IN HOLE, REMOVE ALL NYLON TIES, TWINE, ROPE, AND OTHER PACKING MATERIAL. REMOVE AS MUCH BURLAP FROM AROUND ROOTBALL AS IS PRACTICAL.
4. REMOVE ALL NURSERY STAKES AFTER PLANTING.
5. FOR TREES 36" BOX/2.5" CAL. AND LARGER, USE THREE STAKES OR DEADMEN (AS APPROPRIATE), SPACED EVENLY AROUND TREE.
6. STAKING SHALL BE TIGHT ENOUGH TO PREVENT TRUNK FROM BENDING, BUT LOOSE ENOUGH TO ALLOW SOME TRUNK MOVEMENT IN WIND.

A TREE PLANTING
SCALE: NOT TO SCALE

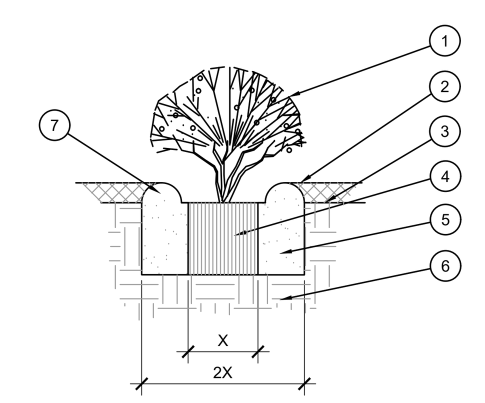

1. SHRUB, PERENNIAL, OR ORNAMENTAL GRASS.
2. MULCH, TYPE AND DEPTH PER PLANS. PLACE NO MORE THAN 1" OF MULCH WITHIN 6" OF PLANT CENTER.
3. FINISH GRADE.
4. ROOT BALL.
5. BACKFILL. AMEND AND FERTILIZE ONLY AS RECOMMENDED IN SOIL FERTILITY ANALYSIS.
6. UNDISTURBED NATIVE SOIL.
7. 3" HIGH EARTHEN WATERING BASIN.

B SHRUB AND PERENNIAL PLANTING
SCALE: NTS

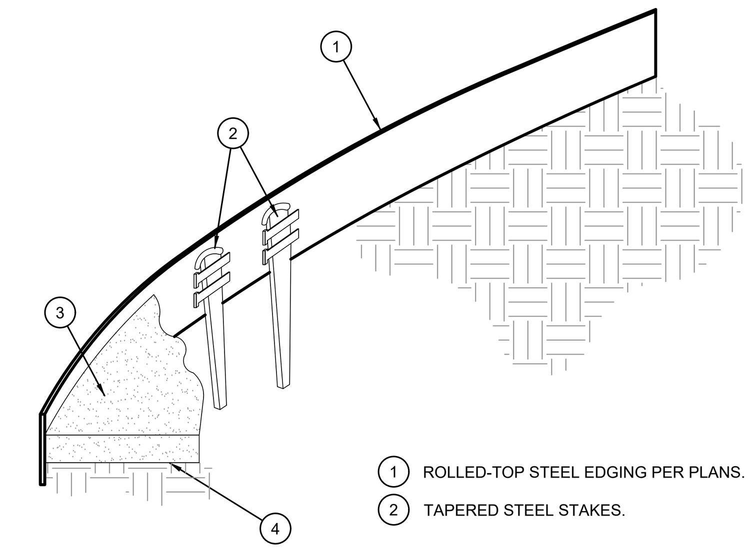

1. ROLLED-TOP STEEL EDGING PER PLANS.
2. TAPERED STEEL STAKES.
3. MULCH, TYPE AND DEPTH PER PLANS.
4. FINISH GRADE.

NOTES:
1) INSTALL EDGING SO THAT STAKES WILL BE ON INSIDE OF PLANTING BED.
2) BOTTOM OF EDGING SHALL BE BURIED A MINIMUM OF 1" BELOW FINISH GRADE.
3) TOP OF MULCH SHALL BE 1" LOWER THAN TOP OF EDGING.

C STEEL EDGING
SCALE: NOT TO SCALE

APPROVED:
I HEREBY CERTIFY THAT THE ABOVE AND FOREGOING SITE PLAN FOR A DEVELOPMENT IN THE CITY OF ROCKWALL, TEXAS, WAS APPROVED BY THE PLANNING & ZONING COMMISSION OF THE CITY OF ROCKWALL ON THE ______ DAY OF ________, _________

WITNESS OUR HANDS, THIS ______ DAY OF __________, ________

PLANNING & ZONING COMMISSION, CHAIRMAN

DIRECTOR OF PLANNING AND ZONING

National Presence. Local Expertise.
EVERGREEN DESIGN GROUP
800.680.6630
www.evergreendesigngroup.com
LANDSCAPE ARCHITECTURE
LAND PLANNING · IRRIGATION DESIGN

REVISION | DATE | NO.

TEL: 214.295.5775
URBAN STRUCTURE
8140 Walnut Hill Lane, Suite 905
Dallas, Texas 75231
Firm Registration #F-22252
www.urbanstruct.com

REGISTERED LANDSCAPE ARCHITECT STEPHEN W. SALES 3470 STATE OF TEXAS
01/17/2025

PROJECT:
ADVANTAGE STORAGE
1701 STATE HIGHWAY 276
OUT OF THE JAMES M. ALLEN SURVEY, ABSTRACT NO. 2
CITY OF ROCKWALL, ROCKWALL COUNTY, TEXAS

SHEET TITLE:
PLANTING DETAILS & SPECS

PREPARED ON: 07/14/2022
CLIENT: ADVANTAGE STORAGE
DRAWN BY: LL
DESIGNER: LL
REVIEWER: BP
U.S. PROJECT: 22577

SHEET
LP-2

CITY CASE NO. ######

FILE NAME: ADVANTAGE STORAGE-ROCKWALL LP_2025-01-16.DWG
FILE LOCATION: P:\Shared\Projects\2022\Advantage Storage - Rockwall TX\Advantage Storage-Rockwall LP_2025-01-16.dwg
LAST MODIFIED ON: 1/17/2025 3:07 PM
PLOTTED ON: 1/17/2025 3:16 PM

Atmos Energy Approved Vegetation

The following plants are allowed on Atmos Energy's right of way. These plants have less than 4' growth potential and a non-intrusive root system. They are also local to the North Texas climate.

Shrub

Agave
American BeautyBerry
Barberry
Cast Iron Plant
Color Guard Yucca
Compact Nandina
Drift Rose
Dwarf Boxwood
Dwarf Chinese Holly
Dwarf Indian Hawthorn
Dwarf Spiera
Dwarf Variegated
Dwarf Yaupon Holly
Flirt Nandina
Harbor Dwarf Nandina
Miniature Crape Myrtle
Rose Creek Abelia
Rosemary
Spreading Yew
Variegated Abelia
Wheeler's Dwarf

Perennial

Autumn Salvia
Black-Eyed-Susan
Blackfoot Daisy
Blue Mealy Sage
Calylophus
Cone Flower
Creeping Lantana
Daylily
Dwarf Mexican Petunia
Flame Acanthus
Garden Phlox
Gaura
Holly Fern
Lamb's Ear
Wood Fern

Ornamental Grass

Berkeley's Sedge
Gulf Muhly
Hameln's Fountain
Mexican Feather

Groundcover

Ajuga
Asian Jasmine
Creeping Juniper
Creeping Rosemary
Lirope, regular or giant
Mondo Grass
Purple Euonymus

Customer Service: 888.286.6700
atmosenergy.com/pipelinerenewal

Rose Creek Abelia

Dwarf Yaupon Holly

Daylily

Harbor Dwarf Nandina

Lily Turf

Black-Eyed Susan

Dwarf Spirea

Mexican Feather grass

Greggs Salvia

DEVELOPMENT APPLICATION

City of Rockwall
Planning and Zoning Department
385 S. Goliad Street
Rockwall, Texas 75087

STAFF USE ONLY

PLANNING & ZONING CASE NO.

NOTE: THE APPLICATION IS NOT CONSIDERED ACCEPTED BY THE CITY UNTIL THE PLANNING DIRECTOR AND CITY ENGINEER HAVE SIGNED BELOW.

DIRECTOR OF PLANNING:

CITY ENGINEER:

PLEASE CHECK THE APPROPRIATE BOX BELOW TO INDICATE THE TYPE OF DEVELOPMENT REQUEST [SELECT ONLY ONE BOX]:

PLATTING APPLICATION FEES:

- ☐ MASTER PLAT ($100.00 + $15.00 ACRE) [1]
- ☐ PRELIMINARY PLAT ($200.00 + $15.00 ACRE) [1]
- ☐ FINAL PLAT ($300.00 + $20.00 ACRE) [1]
- ☐ REPLAT ($300.00 + $20.00 ACRE) [1]
- ☐ AMENDING OR MINOR PLAT ($150.00)
- ☐ PLAT REINSTATEMENT REQUEST ($100.00)

SITE PLAN APPLICATION FEES:

- ☐ SITE PLAN ($250.00 + $20.00 ACRE) [1]
- ☒ AMENDED SITE PLAN/ELEVATIONS/LANDSCAPING PLAN ($100.00)

ZONING APPLICATION FEES:

- ☐ ZONING CHANGE ($200.00 + $15.00 ACRE) [1]
- ☐ SPECIFIC USE PERMIT ($200.00 + $15.00 ACRE) [1 & 2]
- ☐ PD DEVELOPMENT PLANS ($200.00 + $15.00 ACRE) [1]

OTHER APPLICATION FEES:

- ☐ TREE REMOVAL ($75.00)
- ☐ VARIANCE REQUEST/SPECIAL EXCEPTIONS ($100.00) [2]

NOTES:
[1]: IN DETERMINING THE FEE, PLEASE USE THE EXACT ACREAGE WHEN MULTIPLYING BY THE PER ACRE AMOUNT. FOR REQUESTS ON LESS THAN ONE ACRE, ROUND UP TO ONE (1) ACRE.
[2]: A *$1,000.00* FEE WILL BE ADDED TO THE APPLICATION FEE FOR ANY REQUEST THAT INVOLVES CONSTRUCTION WITHOUT OR NOT IN COMPLIANCE TO AN APPROVED BUILDING PERMIT.

PROPERTY INFORMATION [PLEASE PRINT]

ADDRESS	NE CORNER JOHN KING BLVD & SH 276				
SUBDIVISION	CAMBRIDGE ESTATES	LOT	1	BLOCK	1
GENERAL LOCATION	NE CORNER JOHN KING BLVD & SH 276				

ZONING, SITE PLAN AND PLATTING INFORMATION [PLEASE PRINT]

CURRENT ZONING	PD10 HIGHWAY OVERLAY	CURRENT USE	UNDER CONSTRUCTION		
PROPOSED ZONING	PD10 HIGHWAY OVERLAY	PROPOSED USE	MINI STORAGE		
ACREAGE	3.682	LOTS [CURRENT]	1	LOTS [PROPOSED]	1

☐ *SITE PLANS AND PLATS: BY CHECKING THIS BOX YOU ACKNOWLEDGE THAT DUE TO THE PASSAGE OF HB3167 THE CITY NO LONGER HAS FLEXIBILITY WITH REGARD TO ITS APPROVAL PROCESS, AND FAILURE TO ADDRESS ANY OF STAFF'S COMMENTS BY THE DATE PROVIDED ON THE DEVELOPMENT CALENDAR WILL RESULT IN THE DENIAL OF YOUR CASE.*

OWNER/APPLICANT/AGENT INFORMATION [PLEASE PRINT/CHECK THE PRIMARY CONTACT/ORIGINAL SIGNATURES ARE REQUIRED]

☐ OWNER	ADV Rockwall John King Property Owner LLC	☐ APPLICANT	SAME
CONTACT PERSON	BRIAN BACA	CONTACT PERSON	
ADDRESS	2221 Lakeside Blvd. Suite 1260	ADDRESS	
CITY, STATE & ZIP	Richardson, TX 75082	CITY, STATE & ZIP	
PHONE	214-308-5225	PHONE	
E-MAIL	bbaca@advconstruction.net	E-MAIL	

NOTARY VERIFICATION [REQUIRED]

BEFORE ME, THE UNDERSIGNED AUTHORITY, ON THIS DAY PERSONALLY APPEARED _____ [*OWNER*] THE UNDERSIGNED, WHO STATED THE INFORMATION ON THIS APPLICATION TO BE TRUE AND CERTIFIED THE FOLLOWING:

"I HEREBY CERTIFY THAT I AM THE OWNER FOR THE PURPOSE OF THIS APPLICATION; ALL INFORMATION SUBMITTED HEREIN IS TRUE AND CORRECT; AND THE APPLICATION FEE OF $ 100.00, TO COVER THE COST OF THIS APPLICATION, HAS BEEN PAID TO THE CITY OF ROCKWALL ON THIS THE 21 ST DAY OF JANUARY, 20 25. BY SIGNING THIS APPLICATION, I AGREE THAT THE CITY OF ROCKWALL (I.E. "CITY") IS AUTHORIZED AND PERMITTED TO PROVIDE INFORMATION CONTAINED WITHIN THIS APPLICATION TO THE PUBLIC. THE CITY IS ALSO AUTHORIZED AND PERMITTED TO REPRODUCE ANY COPYRIGHTED INFORMATION SUBMITTED IN CONJUNCTION WITH THIS APPLICATION, IF SUCH REPRODUCTION IS ASSOCIATED OR IN RESPONSE TO A REQUEST FOR PUBLIC INFORMATION."

GIVEN UNDER MY HAND AND SEAL OF OFFICE ON THIS THE 21 ST DAY OF JANUARY, 20 25.

OWNER'S SIGNATURE

NOTARY PUBLIC IN AND FOR THE STATE OF TEXAS

MY COMMISSION EXPIRES

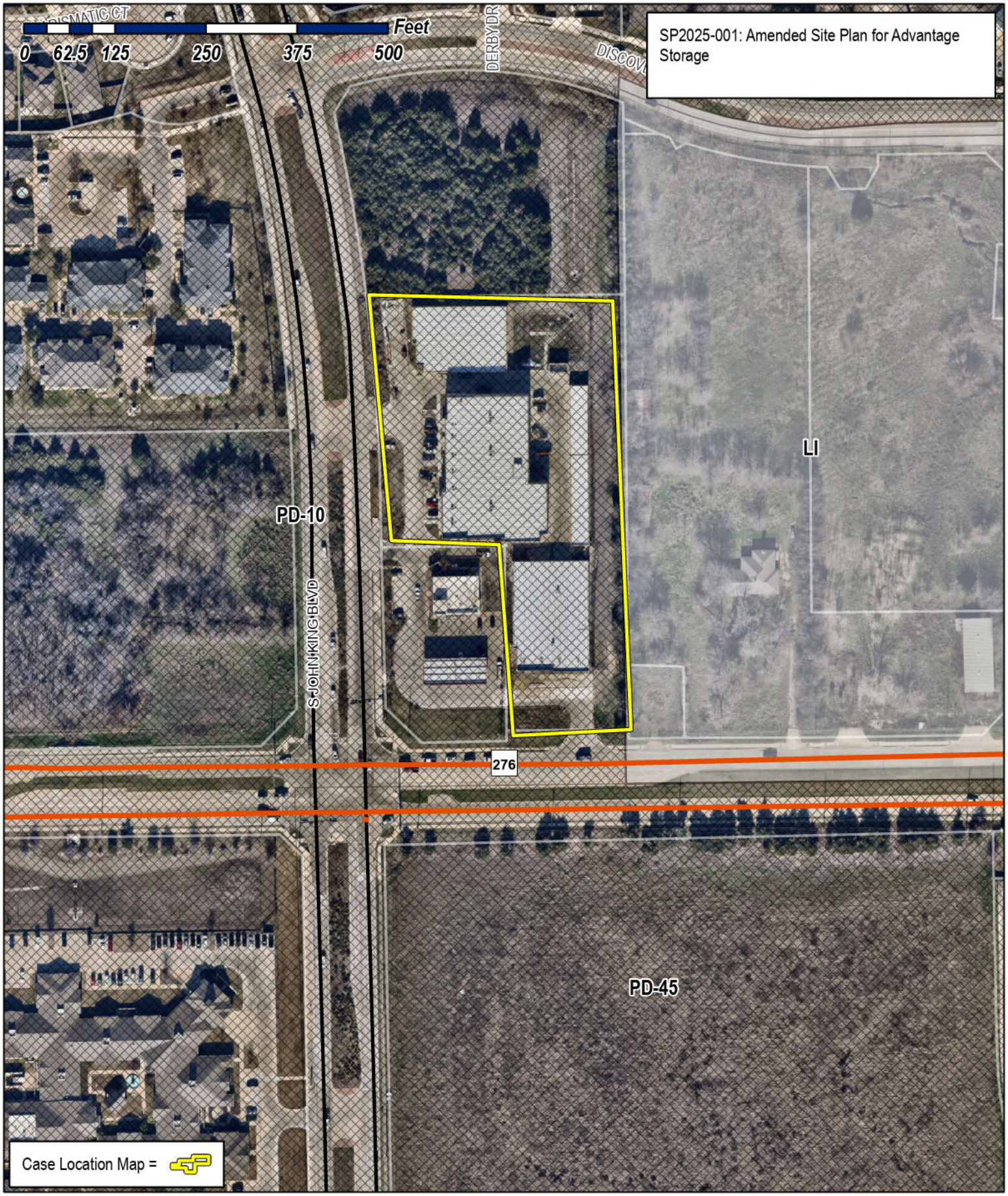

City of Rockwall

Planning & Zoning Department
385 S. Goliad Street
Rockwall, Texas 75087
(P): (972) 771-7745
(W): www.rockwall.com

The City of Rockwall GIS maps are continually under development and therefore subject to change without notice. While we endeavor to provide timely and accurate information, we make no guarantees. The City of Rockwall makes no warranty, express or implied, including warranties of merchantability and fitness for a particular purpose. Use of the information is the sole responsibility of the user.

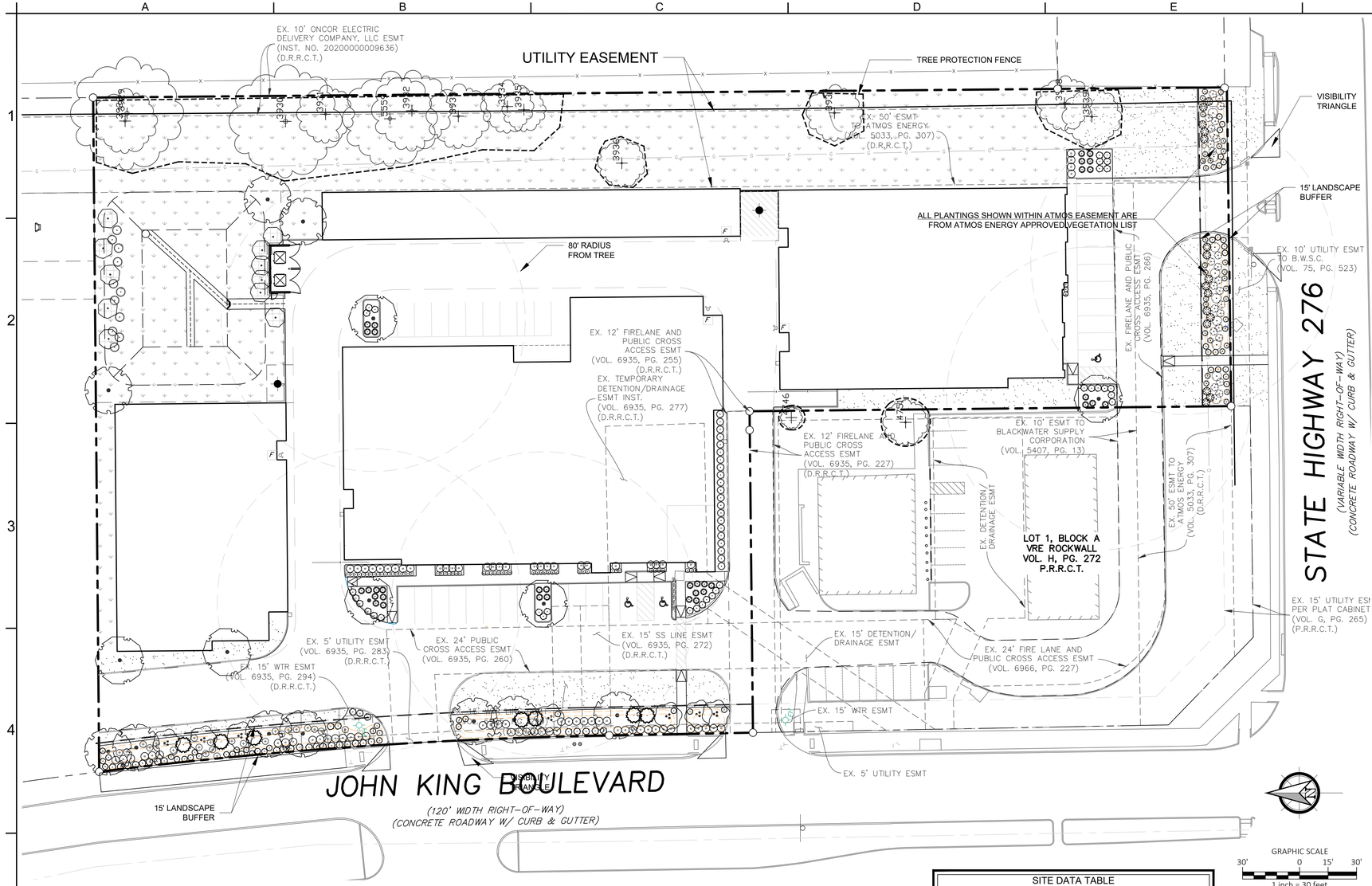

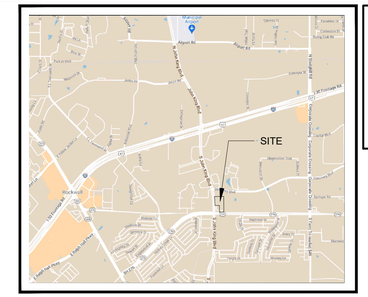

VICINITY MAP
(NOT TO SCALE)

National Presence. Local Expertise.
EVERGREEN DESIGN GROUP
800.680.6630
www.evergreendesigngroup.com
LANDSCAPE ARCHITECTURE
LAND PLANNING · IRRIGATION DESIGN

GRAPHIC SCALE
30' 0 15' 30'
1 inch = 30 feet

PLANT SCHEDULE

CANOPY TREES	QTY	BOTANICAL / COMMON NAME	CAL	SIZE
	10	QUERCUS MUHLENBERGIA CHINQUAPIN OAK	4" CAL*	14'-16' HT
	6	ULMUS CRASSIFOLIA CEDAR ELM	4" CAL*	16'-18' HT

*12 CANOPY TREES TO BE USED FOR MITIGATION, ALL CANOPY TREES MUST BE 4" CAL.

ACCENT TREES	QTY	BOTANICAL / COMMON NAME	CAL	SIZE
	7	CERCIS CANADENSIS EASTERN REDBUD 3-5 STEMS	3" CAL. 1" / STEM	4' -6' HT
	7	ILEX DECIDUA POSSUM HAW 3-5 STEMS	3" CAL. 1" / STEM	4' -6' HT

LARGE SHRUBS	QTY	BOTANICAL / COMMON NAME	CONT	
	11	RHUS VIRENS V. VIRENS EVERGREEN SUMAC	10 GAL	4'-6' HT
	10	TAXUS CUSPIDATA SPREADING YEW	10 GAL	3'-5' HT

MEDIUM SHRUBS	QTY	BOTANICAL / COMMON NAME	CONT
	83	ILEX CORNUTA 'BURFORDII NANA' DWARF BURFORD HOLLY	5 GAL
	23	LOROPETALUM CHINENSE 'PURPLE DAYDREAM' DWARF FRINGEFLOWER	5 GAL.
	24	ILEX VOMITORIA 'NANA' DWARF YAUPON HOLLY	5 GAL
	16	NANDINA DOMESTICA ' HARBOUR DWARF' HARBOUR DWARF NANDINA	5 GAL

SMALL SHRUBS	QTY	BOTANICAL / COMMON NAME	CONT
	49	BERBERIS THUN. 'CRIMSON PYGMY" CRIMSON PYGMY BARBERRY	5 GAL.
	34	HESPERALOE PARVIFLORA RED YUCCA	3 GAL
	63	LANTANA X `NEW GOLD` NEW GOLD LANTANA	5 GAL
	32	LANTANA MONTEVIDENSIS CREEPING LANTANA	5 GAL

ORNAMENTAL GRASSES	QTY	BOTANICAL / COMMON NAME	CONT
	32	MUHLENBERGIA RIGENS DEER GRASS	5 GAL

GROUND COVER	QTY	BOTANICAL / COMMON NAME	CONT
	53	RUELLIA BRITTONIANA 'KATIE' KATIE'S DWARF PETUNIA	3 GAL
	12,745 SF	CYNODON 'TIF-TUF' TIF-TUF HYBRID BERMUDA GRASS	SOD
	38,885 SF	BLACKLAND PRAIRIE SEED MIX NATIVE AMERICAN SEED (SEEDSOURCE.COM)	HYDROSEED

MULCHES

AFTER ALL PLANTING IS COMPLETE, CONTRACTOR SHALL INSTALL 3" THICK LAYER OF 1-1/2" SHREDDED WOOD MULCH, NATURAL (UNDYED). IN ALL PLANTING AREAS (EXCEPT FOR TURF AND SEEDED AREAS). CONTRACTOR SHALL SUBMIT SAMPLES OF ALL MULCHES TO LANDSCAPE ARCHITECT AND OWNER FOR APPROVAL PRIOR TO CONSTRUCTION. ABSOLUTELY NO EXPOSED GROUND SHALL BE LEFT SHOWING ANYWHERE ON THE PROJECT AFTER MULCH HAS BEEN INSTALLED (SUBJECT TO THE CONDITIONS AND REQUIREMENTS OF THE "GENERAL GRADING AND PLANTING NOTES" AND SPECIFICATIONS).

ROOT BARRIERS

THE CONTRACTOR SHALL INSTALL ROOT BARRIERS NEAR ALL NEWLY-PLANTED TREES THAT ARE LOCATED WITHIN FIVE (5) FEET OF PAVING OR CURBS. ROOT BARRIERS SHALL BE "CENTURY" OR "DEEP-ROOT" 24" DEEP PANELS (OR EQUAL). BARRIERS SHALL BE LOCATED IMMEDIATELY ADJACENT TO HARDSCAPE. INSTALL PANELS PER MANUFACTURER'S RECOMMENDATIONS. UNDER NO CIRCUMSTANCES SHALL THE CONTRACTOR USE ROOT BARRIERS OF A TYPE THAT COMPLETELY ENCIRCLE THE ROOTBALL.

UTILITY SCREENING NOTE:
GROUND MOUNTED EQUIPMENT AND AIR CONDITIONING UNITS SHALL BE SCREENED UTILIZING PLANTINGS, BERMS, WALLS MATCHING THE MAIN STRUCTURE, OR AN ARCHITECTURAL FEATURE THAT IS INTEGRAL TO THE BUILDING'S DESIGN.

LANDSCAPE STANDARDS

05.01 LANDSCAPE BUFFERS - NON-RESIDENTIAL

REQ. ABUTTING A PUBLIC RIGHT-OF-WAY:	15' WIDE BUFFER REQ. W/ 2 CANOPY + 4 ACCENT TREE PER 100 LIN. FT. OF FRONTAGE; GROUND COVER, BUILT-UP BERM AND SHRUBBERY ALONG ENTIRE FRONTAGE, 30" HIGH, MIN.- 48" MAX. HT.
JOHN KING BLVD.: REQUIRED PLANTING: PROVIDED 15' BUFFER:	±344.8' STREET FRONTAGE 7 CANOPY TREES, 14 ACCENT TREES, BERM W/ SHRUBS 7 NEW CANOPY TREES, 14 ACCENT TREES W/ BERM AND SHRUBS (30" HIGH MIN.)
ST. HWY. 276 OVERLAY DISTRICT: ±167.8 STREET FRONTAGE	15' WIDE LANDSCAPE BUFFER W/ GR. COVER, BUILT-UP BERM & SHRUBS (30" MIN.-48" MAX) ALONG ENTIRE LENGTH OF FRONTAGE. 2 CANOPY TREES + 4 ACCENT TREES PER 100 LIN. FEET OF FRONTAGE
REQUIRED PLANTING: PROVIDED 15' BUFFER:	3 CANOPY TREES, 7 ACCENT TREES, BERM W/ SHRUBS UNABLE TO PROVIDE REQ. TREES IN BUFFER DUE TO EASEMENTS & UNDERGROUND UTILITIES (WATER, STORM, SANITARY), 10 LG SHRUBS (SUBSTITUTED FOR 7 ACCENT TREES) PLACED IN BUFFER W/ BERM & SHRUBS (30" HI MIN.-48" MAX.) PLACED IN BUFFER
EAST PROPERTY LINE BUFFER:	NOT REQUIRED. PROPERTY ZONED PD-10
NORTH PROPERTY LINE BUFFER:	NOT REQUIRED. PROPERTY ZONED LIGHT INDUSTRIAL

05.02 LANDSCAPE SCREENING

REQ. HEADLIGHT SCREENING	NOT APPLICABLE
SCREENING FROM RESIDENTIAL	NOT APPLICABLE

05.03 LANDSCAPE REQUIREMENTS - COMMERCIAL (C) DISTRICT

TOTAL SITE AREA:	±160,353 SF
LANDSCAPE AREA REQUIRED TOTAL SITE:	32,071 SF (20%)
LANDSCAPE PROVIDED, TOTAL SITE:	±58,742 SF (36.6%)
LOCATION OF LANDSCAPING:	MIN. 50% OF REQ. LANDSCAPING SHALL BE LOCATED IN THE FRONT OF & ALONG THE SIDE OF BUILDINGS W/ STREET FRONTAGE.
LANDSCAPE AREAS IN FRONT & SIDES OF BUILDINGS:	±40,718 SF (69%)
MIN. SIZE OF AREAS:	ALL REQ. LANDSCAPING SHALL BE NO LESS THAN 5' WIDE AND A MIN. OF 25 SF IN AREA
DETENTION BASIN (XERISCAPE OPTION):	MIN. (1) SHRUB/ORNAMENTAL GRASS PER 750 SF OF DRY LAND AREA
PROPOSED DETENTION BASIN LANDSCAPING:	5,649 / 750 = 8 SHRUBS + NATIVE GRASSES
PARKING LOT LANDSCAPING	MIN. 5% OR 200 SF OF LANDSCAPING, WHICHEVER IS GREATER, IN THE INTERIOR OF PARKING LOT AREA.
PROPOSED PARKING AREA:	±29,004 SF
REQ. PARKING LOT LANDSCAPING:	±1,450 SF (29,004 x 5%) AND (1) LG. CANOPY TREE
FOR	EVERY 10 PARKING SPACES INTERNAL TO PARKING AREAS (PARKING AREA OVER 20,000 SF) REQ. PARKING SPACES MUST BE WITHIN 80' OF A CANOPY TREE TRUNK
PROPOSED PARKING LOT LANDSCAPING:	±1,528 SF (5%)
	34 PARKING SPACES / 10 = 3 TREES
TREES PROVIDED:	5 CANOPY TREES

SITE DATA TABLE

EXISTING USE:	VACANT	
PROPOSED USE:	MINI-WAREHOUSE & OFFICE SUITES	
EXISTING ZONING DISTRICT:	PLANNED DEVELOPMENT (PD-10)	
SITE AREA (LOT 2):	3.682 AC (160,388 SF)	
SITE AREA (LOT 3):	2.565 AC (111,719 SF)	
TOTAL SITE AREA:	6.247 AC (272,107 SF)	
FOR LOT 2 ONLY		
BUILDING AREA	MINI-WAREHOUSE	OFFICE SUITES
BUILDING A (3 STORIES):	69,250 SF	4,400 SF
BUILDING B (1 STORY):	11,350 SF	0 SF
BUILDING C (1 STORY):	4,000 SF	0 SF
BUILDING D (1 STORY):	13,100 SF	3,000 SF
TOTAL BUILDING AREA:	105,100 SF	
TOTAL BUILDING FOOTPRINT AREA:	56,000 SF	
TOTAL STORAGE UNITS:	635 UNITS	
	REQUIRED	PROVIDED
MAXIMUM LOT COVERAGE:	96,233 SF (60%)	56,000 SF (35%)
FLOOR TO AREA RATIO:	4:1	0.66:1
MAXIMUM BUILDING HEIGHT:	60 FT	42 FT
LANDSCAPE AREA:	32,078 SF (20%)	58,982 SF (36.8%)
	MINI-WAREHOUSE	OFFICE SUITES
PARKING REQUIRED:	9 STALLS (3 STALLS + 1/100 UNITS)	25 STALLS (1/300 SF)
TOTAL PARKING REQUIRED:	34 STALLS	
TOTAL PARKING PROVIDED:	34 STALLS	

NOTE: PD-10 REQUIRES COMMERCIAL (C) ZONING STANDARDS TO BE FOLLOWED FOR A NON-RESIDENTIAL DEVELOPMENT.

TREE MITIGATION SUMMARY

TOTAL MITIGATION REQUIRED:	45.75"
MITIGATION PROVIDED BY PLANTING 4" CALIPER TREES (12) TO BE PLANTED ONSITE:	48.0"
MITIGATION PROVIDED BY PURCHASING PRESERVATION CREDITS (20% OF TOTAL):	0"
TOTAL MITIGATION PROVIDED:	48.0"

CONTACT 811 BEFORE YOU DIG
811
SAFE DIGGING PARTNER

APPROVED:
I HEREBY CERTIFY THAT THE ABOVE AND FOREGOING SITE PLAN FOR A DEVELOPMENT IN THE CITY OF ROCKWALL, TEXAS, WAS APPROVED BY THE PLANNING & ZONING COMMISSION OF THE CITY OF ROCKWALL ON THE _____ DAY OF _____, _____

WITNESS OUR HANDS, THIS _____ DAY OF _____, _____

PLANNING & ZONING COMMISSION, CHAIRMAN

DIRECTOR OF PLANNING AND ZONING

NO.	DATE	REVISION

TEL: 214.295.5775
URBAN STRUCTURE
8140 Walnut Hill Lane, Suite 905
Dallas, Texas 75231
Firm Registration #F-12252
www.urbanstruct.com

REGISTERED LANDSCAPE ARCHITECT
STEPHEN W. SALES
3470
STATE OF TEXAS
01/17/2025

PROJECT:

ADVANTAGE STORAGE
1701 STATE HIGHWAY 276
OUT OF THE JAMES M. ALLEN SURVEY, ABSTRACT NO. 2
CITY OF ROCKWALL, ROCKWALL COUNTY, TEXAS

SHEET TITLE:
LANDSCAPE PLANTING PLAN

PREPARED ON:	07/14/2022
CLIENT:	ADVANTAGE STORAGE
DRAWN BY:	LL
DESIGNER:	LL
REVIEWER:	BP
U.S. PROJECT:	22577

SHEET
LP-1

CITY CASE NO. ######

PLANTING SPECIFICATIONS

GENERAL

A. QUALIFICATIONS OF LANDSCAPE CONTRACTOR
1. ALL LANDSCAPE WORK SHOWN ON THESE PLANS SHALL BE PERFORMED BY A SINGLE FIRM SPECIALIZING IN LANDSCAPE PLANTING.
2. A LIST OF SUCCESSFULLY COMPLETED PROJECTS OF THIS TYPE, SIZE AND NATURE MAY BE REQUESTED BY THE OWNER FOR FURTHER QUALIFICATION MEASURES.
3. THE LANDSCAPE CONTRACTOR SHALL HOLD A VALID NURSERY AND FLORAL CERTIFICATE ISSUED BY THE TEXAS DEPARTMENT OF AGRICULTURE, AS WELL AS OPERATE UNDER A COMMERCIAL PESTICIDE APPLICATOR LICENSE ISSUED BY EITHER THE TEXAS DEPARTMENT OF AGRICULTURE OR THE TEXAS STRUCTURAL PEST CONTROL BOARD.

B. SCOPE OF WORK
1. WORK COVERED BY THESE SECTIONS INCLUDES THE FURNISHING AND PAYMENT OF ALL MATERIALS, LABOR, SERVICES, EQUIPMENT, LICENSES, TAXES AND ANY OTHER ITEMS THAT ARE NECESSARY FOR THE EXECUTION, INSTALLATION AND COMPLETION OF ALL WORK, SPECIFIED HEREIN AND / OR SHOWN ON THE LANDSCAPE PLANS, NOTES, AND DETAILS.
2. ALL WORK SHALL BE PERFORMED IN ACCORDANCE WITH ALL APPLICABLE LAWS, CODES AND REGULATIONS REQUIRED BY AUTHORITIES HAVING JURISDICTION OVER SUCH WORK, INCLUDING ALL INSPECTIONS AND PERMITS REQUIRED BY FEDERAL, STATE AND LOCAL AUTHORITIES IN SUPPLY, TRANSPORTATION AND INSTALLATION OF MATERIALS.
3. THE LANDSCAPE CONTRACTOR SHALL VERIFY THE LOCATION OF ALL UNDERGROUND UTILITY LINES (WATER, SEWER, ELECTRICAL, TELEPHONE, GAS, CABLE, TELEVISION, ETC.) PRIOR TO THE START OF ANY WORK.

PRODUCTS

A. ALL MANUFACTURED PRODUCTS SHALL BE NEW.
B. CONTAINER AND BALLED-AND-BURLAPPED PLANTS:
1. FURNISH NURSERY-GROWN PLANTS COMPLYING WITH ANSI Z60.1-2014. PROVIDE WELL-SHAPED, FULLY BRANCHED, HEALTHY, VIGOROUS STOCK FREE OF DISEASE, INSECTS, EGGS, LARVAE, AND DEFECTS SUCH AS KNOTS, SUN SCALD, INJURIES, ABRASIONS, AND DISFIGUREMENT. ALL PLANTS WITHIN A SPECIES SHALL HAVE SIMILAR SIZE, AND SHALL BE OF A FORM TYPICAL FOR THE SPECIES. ALL TREES SHALL BE OBTAINED FROM SOURCES WITHIN 200 MILES OF THE PROJECT SITE, AND WITH SIMILAR CLIMACTIC CONDITIONS.
2. ROOT SYSTEMS SHALL BE HEALTHY, DENSELY BRANCHED ROOT SYSTEMS, NON-POT-BOUND, FREE FROM ENCIRCLING AND/OR GIRDLING ROOTS, AND FREE FROM ANY OTHER ROOT DEFECTS (SUCH AS J-SHAPED ROOTS).
3. TREES MAY BE PLANTED FROM CONTAINERS OR BALLED-AND-BURLAPPED (B&B), UNLESS SPECIFIED ON THE PLANTING LEGEND. BARE-ROOT TREES ARE NOT ACCEPTABLE.
4. ANY PLANT DEEMED UNACCEPTABLE BY THE LANDSCAPE ARCHITECT OR OWNER SHALL BE IMMEDIATELY REMOVED FROM THE SITE AND SHALL BE REPLACED WITH AN ACCEPTBLE PLANT OF LIKE TYPE AND SIZE AT THE CONTRACTOR'S OWN EXPENSE. ANY PLANTS APPEARING TO BE UNHEALTHY, EVEN IF DETERMINED TO STILL BE ALIVE, SHALL NOT BE ACCEPTED. THE LANDSCAPE ARCHITECT AND OWNER SHALL BE THE SOLE JUDGES AS TO THE ACCEPTABILITY OF PLANT MATERIAL.
5. ALL TREES SHALL BE STANDARD IN FORM, UNLESS OTHERWISE SPECIFIED. TREES WITH CENTRAL LEADERS WILL NOT BE ACCEPTED IF LEADER IS DAMAGED OR REMOVED. PRUNE ALL DAMAGED TWIGS AFTER PLANTING.
6. CALIPER MEASUREMENTS FOR STANDARD (SINGLE TRUNK) TREES SHALL BE AS FOLLOWS: SIX INCHES ABOVE THE ROOT FLARE FOR TREES UP TO AND INCLUDING FOUR INCHES IN CALIPER, AND TWELVE INCHES ABOVE THE ROOT FLARE FOR TREES EXCEEDING FOUR INCHES IN CALIPER.
7. MULTI-TRUNK TREES SHALL BE MEASURED BY THEIR OVERALL HEIGHT, MEASURED FROM THE TOP OF THE ROOT BALL. WHERE CALIPER MEASUREMENTS ARE USED, THE CALIPER SHALL BE CALCULATED AS ONE-HALF OF THE SUM OF THE CALIPER OF THE THREE LARGEST TRUNKS.
8. ANY TREE OR SHRUB SHOWN TO HAVE EXCESS SOIL PLACED ON TOP OF THE ROOT BALL, SO THAT THE ROOT FLARE HAS BEEN COMPLETELY COVERED, SHALL BE REJECTED.

C. SOD: PROVIDE WELL-ROOTED SOD OF THE VARIETY NOTED ON THE PLANS. SOD SHALL BE CUT FROM HEALTHY, MATURE TURF WITH SOIL THICKNESS OF 3/4" TO 1". EACH PALLET OF SOD SHALL BE ACCOMPANIED BY A CERTIFICATE FROM SUPPLIER STATING THE COMPOSITION OF THE SOD.
D. TOPSOIL: SANDY TO CLAY LOAM TOPSOIL, FREE OF STONES LARGER THAN ½ INCH, FOREIGN MATTER, PLANTS, ROOTS, AND SEEDS.
E. COMPOST: WELL-COMPOSTED, STABLE, AND WEED-FREE ORGANIC MATTER, pH RANGE OF 5.5 TO 8; MOISTURE CONTENT 35 TO 55 PERCENT BY WEIGHT; 100 PERCENT PASSING THROUGH 3/4-INCH SIEVE; SOLUBLE SALT CONTENT OF 5 TO 10 DECISIEMENS/M; NOT EXCEEDING 0.5 PERCENT INERT CONTAMINANTS AND FREE OF SUBSTANCES TOXIC TO PLANTINGS. NO MANURE OR ANIMAL-BASED PRODUCTS SHALL BE USED.
F. FERTILIZER: GRANULAR FERTILIZER CONSISTING OF NITROGEN, PHOSPHORUS, POTASSIUM, AND OTHER NUTRIENTS IN PROPORTIONS, AMOUNTS, AND RELEASE RATES RECOMMENDED IN A SOIL REPORT FROM A QUALIFIED SOIL-TESTING AGENCY (SEE BELOW).
G. MULCH: SIZE AND TYPE AS INDICATED ON PLANS, FREE FROM DELETERIOUS MATERIALS AND SUITABLE AS A TOP DRESSING OF TREES AND SHRUBS.
H. TREE STAKING AND GUYING
1. STAKES: 6' LONG GREEN METAL T-POSTS.
2. GUY AND TIE WIRE: ASTM A 641, CLASS 1, GALVANIZED-STEEL WIRE, 2-STRAND, TWISTED, 0.106 INCH DIAMETER.
3. STRAP CHAFING GUARD: REINFORCED NYLON OR CANVAS AT LEAST 1-1/2 INCH WIDE, WITH GROMMETS TO PROTECT TREE TRUNKS FROM DAMAGE.

I. STEEL EDGING: PROFESSIONAL STEEL EDGING, 14 GAUGE THICK X 4 INCHES WIDE, FACTORY PAINTED DARK GREEN. ACCEPTABLE MANUFACTURERS INCLUDE COL-MET OR APPROVED EQUAL.
J. PRE-EMERGENT HERBICIDES: ANY GRANULAR, NON-STAINING PRE-EMERGENT HERBICIDE THAT IS LABELED FOR THE SPECIFIC ORNAMENTALS OR TURF ON WHICH IT WILL BE UTILIZED. PRE-EMERGENT HERBICIDES SHALL BE APPLIED PER THE MANUFACTURER'S LABELED RATES.

METHODS

A. SOIL PREPARATION
1. BEFORE STARTING WORK, THE LANDSCAPE CONTRACTOR SHALL VERIFY THAT THE GRADE OF ALL LANDSCAPE AREAS ARE WITHIN +/-0.1' OF FINISH GRADE. THE CONTRACTOR SHALL NOTIFY THE OWNER IMMEDIATELY SHOULD ANY DISCREPANCIES EXIST.
2. SOIL TESTING:
a. AFTER FINISH GRADES HAVE BEEN ESTABLISHED, CONTRACTOR SHALL HAVE SOIL SAMPLES FROM THE PROJECT'S LANDSCAPE AREAS TESTED BY AN ESTABLISHED SOIL TESTING LABORATORY. EACH SAMPLE SUBMITTED TO THE LAB SHALL CONTAIN NO LESS THAN ONE QUART OF SOIL, TAKEN FROM BETWEEN THE SOIL SURFACE AND 6" DEPTH. IF NO SAMPLE LOCATIONS ARE INDICATED ON THE PLANS, THE CONTRACTOR SHALL TAKE A MINIMUM OF THREE SAMPLES FROM VARIOUS REPRESENTATIVE LOCATIONS FOR TESTING.
b. THE CONTRACTOR SHALL HAVE THE SOIL TESTING LABORATORY PROVIDE RESULTS FOR THE FOLLOWING: SOIL TEXTURAL CLASS, GENERAL SOIL FERTILITY, pH, ORGANIC MATTER CONTENT, SALT (CEC), LIME, SODIUM ADSORPTION RATIO (SAR) AND BORON CONTENT.
c. THE CONTRACTOR SHALL ALSO SUBMIT THE PROJECT'S PLANT LIST TO THE LABORATORY ALONG WITH THE SOIL SAMPLES.
d. THE SOIL REPORT PRODUCED BY THE LABORATORY SHALL CONTAIN RECOMMENDATIONS FOR THE FOLLOWING (AS APPROPRIATE): SEPARATE SOIL PREPARATION AND BACKFILL MIX RECOMMENDATIONS FOR GENERAL ORNAMENTAL PLANTS, XERIC PLANTS, TURF, AND NATIVE SEED, AS WELL AS PRE-PLANT FERTILIZER APPLICATIONS AND RECOMMENDATIONS FOR ANY OTHER SOIL RELATED ISSUES. THE REPORT SHALL ALSO PROVIDE A FERTILIZER PROGRAM FOR THE ESTABLISHMENT PERIOD AND FOR LONG-TERM MAINTENANCE.
3. THE CONTRACTOR SHALL INSTALL SOIL AMENDMENTS AND FERTILIZERS PER THE SOILS REPORT RECOMMENDATIONS. ANY CHANGE IN COST DUE TO THE SOIL REPORT RECOMMENDATIONS, EITHER INCREASE OR DECREASE, SHALL BE SUBMITTED TO THE OWNER WITH THE REPORT.
4. FOR BIDDING PURPOSES ONLY, THE SOIL PREPARATION SHALL CONSIST OF THE FOLLOWING:
a. TURF: INCORPORATE THE FOLLOWING AMENDMENTS INTO THE TOP 8" OF SOIL BY MEANS OF ROTOTILLING AFTER CROSS-RIPPING:
i. NITROGEN STABILIZED ORGANIC AMENDMENT - 4 CU. YDS. PER 1,000 S.F.
ii. PREPLANT TURF FERTILIZER (10-20-10 OR SIMILAR, SLOW RELEASE, ORGANIC) - 15 LBS PER 1,000 S.F.
iii. "CLAY BUSTER" OR EQUAL - USE MANUFACTURER'S RECOMMENDED RATE
b. TREES, SHRUBS, AND PERENNIALS: INCORPORATE THE FOLLOWING AMENDMENTS INTO THE TOP 8" OF SOIL BY MEANS OF ROTOTILLING AFTER CROSS-RIPPING:
i. NITROGEN STABILIZED ORGANIC AMENDMENT - 4 CU. YDS. PER 1,000 S.F.
ii. 12-12-12 FERTILIZER (OR SIMILAR, ORGANIC, SLOW RELEASE) - 10 LBS. PER CU. YD.
iii. "CLAY BUSTER" OR EQUAL - USE MANUFACTURER'S RECOMMENDED RATE
iv. IRON SULPHATE - 2 LBS. PER CU. YD.
5. IN THE CONTEXT OF THESE PLANS, NOTES, AND SPECIFICATIONS, "FINISH GRADE" REFERS TO THE FINAL ELEVATION OF THE SOIL SURFACE (NOT TOP OF MULCH) AS INDICATED ON THE GRADING PLANS.
a. BEFORE STARTING WORK, THE LANDSCAPE CONTRACTOR SHALL VERIFY THAT THE ROUGH GRADES OF ALL LANDSCAPE AREAS ARE WITHIN +/-0.1' OF FINISH GRADE. SEE SPECIFICATIONS FOR MORE DETAILED INSTRUCTION ON TURF AREA AND PLANTING BED PREPARATION.
b. CONSTRUCT AND MAINTAIN FINISH GRADES AS SHOWN ON GRADING PLANS, AND CONSTRUCT AND MAINTAIN SLOPES AS RECOMMENDED BY THE GEOTECHNICAL REPORT. ALL LANDSCAPE AREAS SHALL HAVE POSITIVE DRAINAGE AWAY FROM STRUCTURES AT THE MINIMUM SLOPE SPECIFIED IN THE REPORT AND ON THE GRADING PLANS, AND AREAS OF POTENTIAL PONDING SHALL BE REGRADED TO BLEND IN WITH THE SURROUNDING GRADES AND ELIMINATE PONDING POTENTIAL.
c. THE LANDSCAPE CONTRACTOR SHALL DETERMINE WHETHER OR NOT THE EXPORT OF ANY SOIL WILL BE NEEDED, TAKING INTO ACCOUNT THE ROUGH GRADE PROVIDED, THE AMOUNT OF SOIL AMENDMENTS TO BE ADDED (**BASED ON A SOIL TEST**, PER SPECIFICATIONS), AND THE FINISH GRADES TO BE ESTABLISHED.
d. ENSURE THAT THE FINISH GRADE IN SHRUB AREAS IMMEDIATELY ADJACENT TO WALKS AND OTHER WALKING SURFACES, AFTER INSTALLING SOIL AMENDMENTS, IS 3" BELOW THE ADJACENT FINISH SURFACE, IN ORDER TO ALLOW FOR PROPER MULCH DEPTH. TAPER THE SOIL SURFACE TO MEET FINISH GRADE, AS SPECIFIED ON THE GRADING PLANS, AT APPROXIMATELY 18" AWAY FROM THE WALKS.
e. ENSURE THAT THE FINISH GRADE IN TURF AREAS IMMEDIATELY ADJACENT TO WALKS AND OTHER WALKING SURFACES, AFTER INSTALLING SOIL AMENDMENTS, IS 1" BELOW THE FINISH SURFACE OF THE WALKS. TAPER THE SOIL SURFACE TO MEET FINISH GRADE, AS SPECIFIED ON THE GRADING PLANS, AT APPROXIMATELY 18" AWAY FROM THE WALKS.
f. SHOULD ANY CONFLICTS AND/OR DISCREPANCIES ARISE BETWEEN THE GRADING PLANS, GEOTECHNICAL REPORT, THESE NOTES AND PLANS, AND ACTUAL CONDITIONS, THE CONTRACTOR SHALL IMMEDIATELY BRING SUCH ITEMS TO THE ATTENTION OF THE LANDSCAPE ARCHITECT, GENERAL CONTRACTOR, AND OWNER.
6. ONCE SOIL PREPARATION IS COMPLETE, THE LANDSCAPE CONTRACTOR SHALL ENSURE THAT THERE ARE NO DEBRIS, TRASH, OR STONES LARGER THAN 1" REMAINING IN THE TOP 6" OF SOIL.

B. SUBMITTALS
1. THE CONTRACTOR SHALL PROVIDE SUBMITTALS AND SAMPLES, IF REQUIRED, TO THE LANDSCAPE ARCHITECT, AND RECEIVE APPROVAL IN WRITING FOR SUCH SUBMITTALS BEFORE WORK COMMENCES.
2. SUBMITTALS SHALL INCLUDE PHOTOS OF PLANTS WITH A RULER OR MEASURING STICK FOR SCALE, PHOTOS OR SAMPLES OF ANY REQUIRED MULCHES, AND SOIL TEST RESULTS AND PREPARATION RECOMMENDATIONS FROM THE TESTING LAB (INCLUDING COMPOST AND FERTILIZER RATES AND TYPES, AND OTHER AMENDMENTS FOR TREE/SHRUB, TURF, AND SEED AREAS AS MAY BE APPROPRIATE).
3. SUBMITTALS SHALL ALSO INCLUDE MANUFACTURER CUT SHEETS FOR PLANTING ACCESSORIES SUCH AS TREE STAKES AND TIES, EDGING, AND LANDSCAPE FABRICS (IF ANY).
4. WHERE MULTIPLE ITEMS ARE SHOWN ON A PAGE, THE CONTRACTOR SHALL CLEARLY INDICATE THE ITEM BEING CONSIDERED.

C. GENERAL PLANTING
1. REMOVE ALL NURSERY TAGS AND STAKES FROM PLANTS.
2. EXCEPT IN AREAS TO BE PLANTED WITH ORNAMENTAL GRASSES, APPLY PRE-EMERGENT HERBICIDES AT THE MANUFACTURER'S RECOMMENDED RATE.
3. TRENCHING NEAR EXISTING TREES:
a. CONTRACTOR SHALL NOT DISTURB ROOTS 1-1/2" AND LARGER IN DIAMETER WITHIN THE CRITICAL ROOT ZONE (CRZ) OF EXISTING TREES, AND SHALL EXERCISE ALL POSSIBLE CARE AND PRECAUTIONS TO AVOID INJURY TO TREE ROOTS, TRUNKS, AND BRANCHES. THE CRZ IS DEFINED AS A CIRCULAR AREA EXTENDING OUTWARD FROM THE TREE TRUNK, WITH A RADIUS EQUAL TO 1' FOR EVERY 1" OF TRUNK DIAMETER-AT-BREAST-HEIGHT (4.5' ABOVE THE AVERAGE GRADE AT THE TRUNK).
b. ALL EXCAVATION WITHIN THE CRZ SHALL BE PERFORMED USING HAND TOOLS. NO MACHINE EXCAVATION OR TRENCHING OF ANY KIND SHALL BE ALLOWED WITHIN THE CRZ.
c. ALTER ALIGNMENT OF PIPE TO AVOID TREE ROOTS 1-1/2" AND LARGER IN DIAMETER. WHERE TREE ROOTS 1-1/2" AND LARGER IN DIAMETER ARE ENCOUNTERED IN THE FIELD, TUNNEL UNDER SUCH ROOTS. WRAP EXPOSED ROOTS WITH SEVERAL LAYERS OF BURLAP AND KEEP MOIST. CLOSE ALL TRENCHES WITHIN THE CANOPY DRIP LINES WITHIN 24 HOURS.
d. ALL SEVERED ROOTS SHALL BE HAND PRUNED WITH SHARP TOOLS AND ALLOWED TO AIR-DRY. DO NOT USE ANY SORT OF SEALERS OR WOUND PAINTS.

D. TREE PLANTING
1. TREE PLANTING HOLES SHALL BE EXCAVATED TO MINIMUM WIDTH OF TWO TIMES THE WIDTH OF THE ROOTBALL, AND TO A DEPTH EQUAL TO THE DEPTH OF THE ROOTBALL LESS TWO TO FOUR INCHES.
2. SCARIFY THE SIDES AND BOTTOM OF THE PLANTING HOLE PRIOR TO THE PLACEMENT OF THE TREE. REMOVE ANY GLAZING THAT MAY HAVE BEEN CAUSED DURING THE EXCAVATION OF THE HOLE.
3. FOR CONTAINER AND BOX TREES, TO REMOVE ANY POTENTIALLY GIRDLING ROOTS AND OTHER ROOT DEFECTS, THE CONTRACTOR SHALL SHAVE A 1" LAYER OFF OF THE SIDES AND BOTTOM OF THE ROOTBALL OF ALL TREES JUST BEFORE PLACING INTO THE PLANTING PIT. DO NOT "TEASE" ROOTS OUT FROM THE ROOTBALL.
4. INSTALL THE TREE ON UNDISTURBED SUBGRADE SO THAT THE TOP OF THE ROOTBALL IS TWO TO FOUR INCHES ABOVE THE SURROUNDING GRADE.
5. BACKFILL THE TREE HOLE UTILIZING THE EXISTING TOPSOIL FROM ON-SITE. ROCKS LARGER THAN 1" DIA. AND ALL OTHER DEBRIS SHALL BE REMOVED FROM THE SOIL PRIOR TO THE BACKFILL. SHOULD ADDITIONAL SOIL BE REQUIRED TO ACCOMPLISH THIS TASK, USE STORED TOPSOIL FROM ON-SITE OR IMPORT ADDITIONAL TOPSOIL FROM OFF-SITE AT NO ADDITIONAL COST TO THE OWNER. IMPORTED TOPSOIL SHALL BE OF SIMILAR TEXTURAL CLASS AND COMPOSITION IN THE ON-SITE SOIL.
6. TREES SHALL NOT BE STAKED UNLESS LOCAL CONDITIONS (SUCH AS HEAVY WINDS OR SLOPES) REQUIRE STAKES TO KEEP TREES UPRIGHT. SHOULD STAKING BE REQUIRED, THE TOTAL NUMBER OF TREE STAKES (BEYOND THE MINIMUMS LISTED BELOW) WILL BE LEFT TO THE LANDSCAPE CONTRACTOR'S DISCRETION. SHOULD ANY TREES FALL OR LEAN, THE LANDSCAPE CONTRACTOR SHALL STRAIGHTEN THE TREE, OR REPLACE IT SHOULD IT BECOME DAMAGED. TREE STAKING SHALL ADHERE TO THE FOLLOWING GUIDELINES:
a. 1"-2" TREES — TWO STAKES PER TREE
b. 2-1/2"-4" TREES — THREE STAKES PER TREE
c. TREES OVER 4" CALIPER — GUY AS NEEDED
d. MULTI-TRUNK TREES — THREE STAKES PER TREE MINIMUM, QUANTITY AND POSITIONS AS NEEDED TO STABILIZE THE TREE
e. MULTI-TRUNK TREES — THREE STAKES PER TREE MINIMUM, QUANTITY AND POSITIONS AS NEEDED TO STABILIZE THE TREE
7. UPON COMPLETION OF PLANTING, CONSTRUCT AN EARTH WATERING BASIN AROUND THE TREE. COVER THE INTERIOR OF THE TREE RING WITH THE WEED BARRIER CLOTH AND TOPDRESS WITH MULCH (TYPE AND DEPTH PER PLANS).

E. SHRUB, PERENNIAL, AND GROUNDCOVER PLANTING
1. DIG THE PLANTING HOLES TWICE AS WIDE AND 2" LESS DEEP THAN EACH PLANT'S ROOTBALL. INSTALL THE PLANT IN THE HOLE. BACKFILL AROUND THE PLANT WITH SOIL AMENDED PER SOIL TEST RECOMMENDATIONS.
2. INSTALL THE WEED BARRIER CLOTH, OVERLAPPING IT AT THE ENDS. UTILIZE STEEL STAPLES TO KEEP THE WEED BARRIER CLOTH IN PLACE.
3. WHEN PLANTING IS COMPLETE, INSTALL MULCH (TYPE AND DEPTH PER PLANS) OVER ALL PLANTING BEDS, COVERING THE ENTIRE PLANTING AREA.

F. SODDING
1. SOD VARIETY TO BE AS SPECIFIED ON THE LANDSCAPE PLAN.
2. LAY SOD WITHIN 24 HOURS FROM THE TIME OF STRIPPING. DO NOT LAY IF THE GROUND IS FROZEN.
3. LAY THE SOD TO FORM A SOLID MASS WITH TIGHTLY FITTED JOINTS. BUTT ENDS AND SIDES OF SOD STRIPS - DO NOT OVERLAP. STAGGER STRIPS TO OFFSET JOINTS IN ADJACENT COURSES.
4. ROLL THE SOD TO ENSURE GOOD CONTACT OF THE SOD'S ROOT SYSTEM WITH THE SOIL UNDERNEATH.
5. WATER THE SOD THOROUGHLY WITH A FINE SPRAY IMMEDIATELY AFTER PLANTING TO OBTAIN AT LEAST SIX INCHES OF PENETRATION INTO THE SOIL BELOW THE SOD.

G. MULCH
1. INSTALL MULCH TOPDRESSING, TYPE AND DEPTH PER MULCH NOTE, IN ALL PLANTING AREAS AND TREE RINGS.
2. DO NOT INSTALL MULCH WITHIN 6" OF TREE ROOT FLARE AND WITHIN 24" OF HABITABLE STRUCTURES, EXCEPT AS MAY BE NOTED ON THESE PLANS. MULCH COVER WITHIN 6" OF CONCRETE WALKS AND CURBS SHALL NOT PROTRUDE ABOVE THE FINISH SURFACE OF THE WALKS AND CURBS. MULCH COVER WITHIN 12" OF WALLS SHALL BE AT LEAST 3" LOWER THAN THE TOP OF WALL.

H. CLEAN UP
1. DURING LANDSCAPE PREPARATION AND PLANTING, KEEP ALL PAVEMENT CLEAN AND ALL WORK AREAS IN A NEAT, ORDERLY CONDITION.
2. DISPOSED LEGALLY OF ALL EXCAVATED MATERIALS OFF THE PROJECT SITE.

I. INSPECTION AND ACCEPTANCE
1. UPON COMPLETION OF THE WORK, THE LANDSCAPE CONTRACTOR SHALL PROVIDE THE SITE CLEAN, FREE OF DEBRIS AND TRASH, AND SUITABLE FOR USE AS INTENDED. THE LANDSCAPE CONTRACTOR SHALL THEN REQUEST AN INSPECTION BY THE OWNER TO DETERMINE FINAL ACCEPTABILITY.
2. WHEN THE INSPECTED PLANTING WORK DOES NOT COMPLY WITH THE CONTRACT DOCUMENTS, THE LANDSCAPE CONTRACTOR SHALL REPLACE AND/OR REPAIR THE REJECTED WORK TO THE OWNER'S SATISFACTION WITHIN 24 HOURS.
3. THE LANDSCAPE MAINTENANCE PERIOD WILL NOT COMMENCE UNTIL THE LANDSCAPE WORK HAS BEEN RE-INSPECTED BY THE OWNER AND FOUND TO BE ACCEPTABLE. AT THAT TIME, A WRITTEN NOTICE OF FINAL ACCEPTANCE WILL BE ISSUED BY THE OWNER, AND THE MAINTENANCE AND GUARANTEE PERIODS WILL COMMENCE.

J. LANDSCAPE MAINTENANCE
1. THE LANDSCAPE CONTRACTOR SHALL BE RESPONSIBLE FOR THE MAINTENANCE OF ALL WORK SHOWN ON THESE PLANS FOR 90 DAYS BEYOND FINAL ACCEPTANCE OF ALL LANDSCAPE WORK BY THE OWNER. LANDSCAPE MAINTENANCE SHALL INCLUDE WEEKLY SITE VISITS FOR THE FOLLOWING ACTIONS (AS APPROPRIATE): PROPER PRUNING, RESTAKING OF TREES, RESETTING OF PLANTS THAT HAVE SETTLED, MOWING AND AERATION OF LAWNS, WEEDING, TREATING FOR INSECTS AND DISEASES,REPLACEMENT OF MULCH, REMOVAL OF LITTER, REPAIRS TO THE IRRIGATION SYSTEM DUE TO FAULTY PARTS AND/OR WORKMANSHIP, AND THE APPROPRIATE WATERING OF ALL PLANTINGS. THE LANDSCAPE CONTRACTOR SHALL MAINTAIN THE IRRIGATION SYSTEM IN PROPER WORKING ORDER, WITH SCHEDULING ADJUSTMENTS BY SEASON TO MAXIMIZE WATER CONSERVATION.
2. SHOULD SEEDED AND/OR SODDED AREAS NOT BE COVERED BY AN AUTOMATIC IRRIGATION SYSTEM, THE LANDSCAPE CONTRACTOR SHALL BE RESPONSIBLE FOR WATERING THESE AREAS AND OBTAINING A FULL, HEALTHY STAND OF PLANTS AT NO ADDITIONAL COST TO THE OWNER.
3. TO ACHIEVE FINAL ACCEPTANCE AT THE END OF THE MAINTENANCE PERIOD, ALL OF THE FOLLOWING CONDITIONS MUST OCCUR:
a. THE LANDSCAPE SHALL SHOW ACTIVE, HEALTHY GROWTH (WITH EXCEPTIONS MADE FOR SEASONAL DORMANCY). ALL PLANTS NOT MEETING THIS CONDITION SHALL BE REJECTED AND REPLACED BY HEALTHY PLANT MATERIAL PRIOR TO FINAL ACCEPTANCE.
b. ALL HARDSCAPE SHALL BE CLEANED PRIOR TO FINAL ACCEPTANCE.
c. SODDED AREAS MUST BE ACTIVELY GROWING AND MUST REACH A MINIMUM HEIGHT OF 1 1/2 INCHES BEFORE FIRST MOWING. BARE AREAS LARGER THAN TWELVE SQUARE INCHES MUST BE RESODDED (AS APPROPRIATE) PRIOR TO FINAL ACCEPTANCE. ALL SODDED TURF SHALL BE NEATLY MOWED.

K. WARRANTY PERIOD, PLANT GUARANTEE AND REPLACEMENTS
1. THE LANDSCAPE CONTRACTOR SHALL GUARANTEE ALL TREES, SHRUBS, PERENNIALS, SOD, AND IRRIGATION SYSTEMS FOR A PERIOD OF ONE YEAR FROM THE DATE OF THE OWNER'S FINAL ACCEPTANCE (90 DAYS FOR ANNUAL PLANTS). THE CONTRACTOR SHALL REPLACE, AT HIS OWN EXPENSE AND TO THE SATISFACTION OF THE OWNER, ANY PLANTS WHICH DIE IN THAT TIME, OR REPAIR ANY PORTIONS OF THE IRRIGATION SYSTEM WHICH OPERATE IMPROPERLY.
2. AFTER THE INITIAL MAINTENANCE PERIOD AND DURING THE GUARANTEE PERIOD, THE LANDSCAPE CONTRACTOR SHALL ONLY BE RESPONSIBLE FOR REPLACEMENT OF PLANTS WHEN PLANT DEATH CANNOT BE ATTRIBUTED DIRECTLY TO OVERWATERING OR OTHER DAMAGE BY HUMAN ACTIONS.

L. PROVIDE A MINIMUM OF (2) COPIES OF RECORD DRAWINGS TO THE OWNER UPON COMPLETION OF WORK. A RECORD DRAWING IS A RECORD OF ALL CHANGES THAT OCCURRED IN THE FIELD AND THAT ARE DOCUMENTED THROUGH CHANGE ORDERS, ADDENDA, OR CONTRACTOR/CONSULTANT DRAWING MARKUPS.

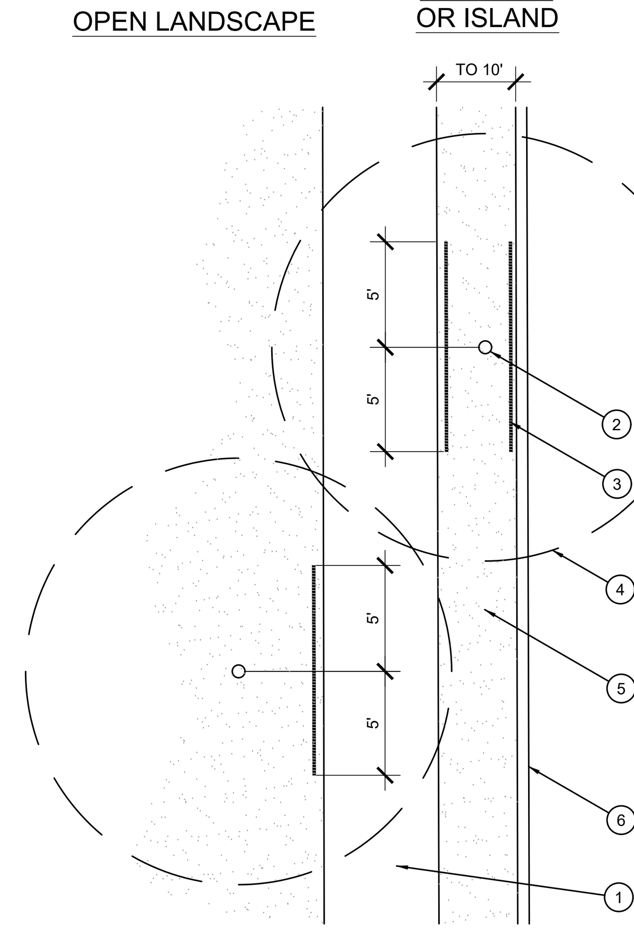

1. TYPICAL WALKWAY OR PAVING
2. TREE TRUNK
3. LINEAR ROOT BARRIER MATERIAL. SEE PLANTING NOTES FOR TYPE AND MANUFACTURER. INSTALL PER MANUFACTURER'S SPECIFICATIONS.
4. TREE CANOPY
5. TYPICAL PLANTING AREA
6. TYPICAL CURB AND GUTTER

NOTES:
1) INSTALL ROOT BARRIERS NEAR ALL NEWLY-PLANTED TREES THAT ARE LOCATED WITHIN FIVE (5) FEET OF PAVING OR CURBS.
2) BARRIERS SHALL BE LOCATED IMMEDIATELY ADJACENT TO HARDSCAPE. UNDER NO CIRCUMSTANCES SHALL THE CONTRACTOR USE ROOT BARRIERS OF A TYPE THAT COMPLETELY ENCIRCLE THE ROOTBALL.

D ROOT BARRIER - PLAN VIEW
SCALE: NOT TO SCALE

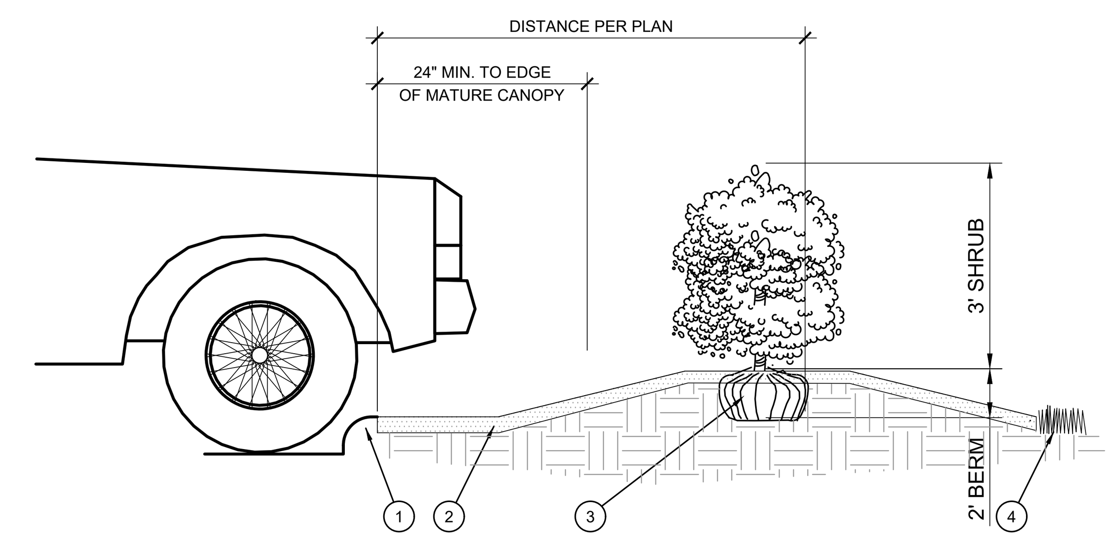

1. CURB.
2. MULCH LAYER.
3. PLANT.
4. TURF (WHERE SHOWN ON PLAN).

E PLANTING AT PARKING AREA
SCALE: NOT TO SCALE

IRRIGATION CONCEPT

1. AN AUTOMATIC IRRIGATION SYSTEM SHALL BE INSTALLED AND OPERATIONAL BY THE TIME OF FINAL INSPECTION. THE ENTIRE IRRIGATION SYSTEM SHALL BE INSTALLED BY A LICENSED AND QUALIFIED IRRIGATION CONTRACTOR.
2. THE IRRIGATION SYSTEM WILL OPERATE ON POTABLE WATER, AND THE SYSTEM WILL HAVE APPROPRIATE BACKFLOW PREVENTION DEVICES INSTALLED TO PREVENT CONTAMINATION OF THE POTABLE SOURCE.
3. ALL NON-TURF PLANTED AREAS SHALL BE DRIP IRRIGATED. SODDED AND SEEDED AREAS SHALL BE IRRIGATED WITH SPRAY OR ROTOR HEADS AT 100% HEAD-TO-HEAD COVERAGE.
4. ALL PLANTS SHARING SIMILAR HYDROZONE CHARACTERISTICS SHALL BE PLACED ON A VALVE DEDICATED TO PROVIDE THE NECESSARY WATER REQUIREMENTS SPECIFIC TO THAT HYDROZONE.
5. THE IRRIGATION SYSTEM SHALL BE DESIGNED AND INSTALLED, TO THE MAXIMUM EXTENT POSSIBLE, TO CONSERVE WATER BY USING THE FOLLOWING DEVICES AND SYSTEMS: MATCHED PRECIPITATION RATE TECHNOLOGY ON ROTOR AND SPRAY HEADS (WHEREVER POSSIBLE), RAIN SENSORS, AND MULTI-PROGRAM COMPUTERIZED IRRIGATION CONTROLLERS FEATURING SENSORY INPUT CAPABILITIES.
6. ALL IRRIGATION SHALL MEET THE REQUIREMENTS OF THE CITY OF ROCKWALL'S UDC (SUBSECTION 05.04, OF ARTICLE 08)

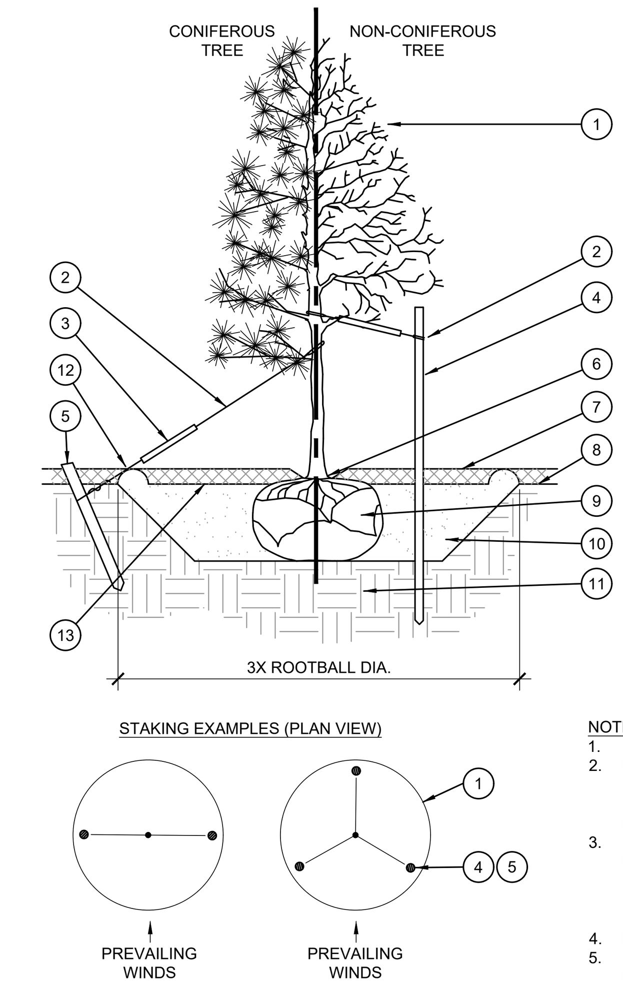

1. TREE CANOPY.
2. CINCH-TIES (24" BOX/2" CAL. TREES AND SMALLER) OR 12 GAUGE GALVANIZED WIRE WITH NYLON TREE STRAPS AT TREE AND STAKE (36" BOX/2.5" CAL. TREES AND LARGER). SECURE TIES OR STRAPS TO TRUNK JUST ABOVE LOWEST MAJOR BRANCHES.
3. 24" X 3/4" P.V.C. MARKERS OVER WIRES.
4. GREEN STEEL T-POSTS. EXTEND POSTS 12" MIN. INTO UNDISTURBED SOIL.
5. PRESSURE-TREATED WOOD DEADMAN, TWO PER TREE (MIN.). BURY OUTSIDE OF PLANTING PIT AND 18" MIN. INTO UNDISTURBED SOIL.
6. TRUNK FLARE.
7. MULCH, TYPE AND DEPTH PER PLANS. DO NOT PLACE MULCH WITHIN 6" OF TRUNK.
8. FINISH GRADE.
9. ROOT BALL.
10. BACKFILL. AMEND AND FERTILIZE ONLY AS RECOMMENDED IN SOIL FERTILITY ANALYSIS.
11. UNDISTURBED NATIVE SOIL.
12. 4" HIGH EARTHEN WATERING BASIN.
13. FINISH GRADE.

NOTES:
1. SCARIFY SIDES OF PLANTING PIT PRIOR TO SETTING TREE.
2. REMOVE EXCESS SOIL APPLIED ON TOP OF THE ROOTBALL THAT COVERS THE ROOT FLARE. THE PLANTING HOLE DEPTH SHALL BE SUCH THAT THE ROOTBALL RESTS ON UNDISTURBED SOIL, AND THE ROOT FLARE IS 2"-4" ABOVE FINISH GRADE.
3. FOR B&B TREES, CUT OFF BOTTOM 1/3 OF WIRE BASKET BEFORE PLACING TREE IN HOLE, CUT OFF AND REMOVE REMAINDER OF BASKET AFTER TREE IS SET IN HOLE, REMOVE ALL NYLON TIES, TWINE, ROPE, AND OTHER PACKING MATERIAL. REMOVE AS MUCH BURLAP FROM AROUND ROOTBALL AS IS PRACTICAL.
4. REMOVE ALL NURSERY STAKES AFTER PLANTING.
5. FOR TREES 36" BOX/2.5" CAL. AND LARGER, USE THREE STAKES OR DEADMEN (AS APPROPRIATE), SPACED EVENLY AROUND TREE.
6. STAKING SHALL BE TIGHT ENOUGH TO PREVENT TRUNK FROM BENDING, BUT LOOSE ENOUGH TO ALLOW SOME TRUNK MOVEMENT IN WIND.

A TREE PLANTING
SCALE: NOT TO SCALE

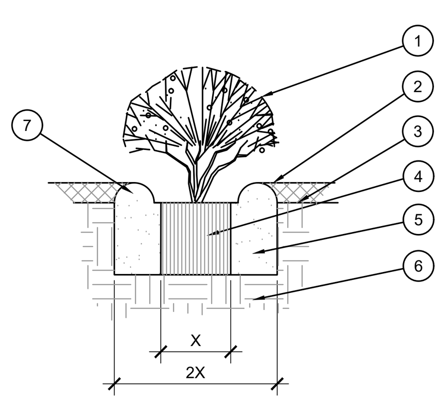

1. SHRUB, PERENNIAL, OR ORNAMENTAL GRASS.
2. MULCH, TYPE AND DEPTH PER PLANS. PLACE NO MORE THAN 1" OF MULCH WITHIN 6" OF PLANT CENTER.
3. FINISH GRADE.
4. ROOT BALL.
5. BACKFILL. AMEND AND FERTILIZE ONLY AS RECOMMENDED IN SOIL FERTILITY ANALYSIS.
6. UNDISTURBED NATIVE SOIL.
7. 3" HIGH EARTHEN WATERING BASIN.

B SHRUB AND PERENNIAL PLANTING
SCALE: NTS

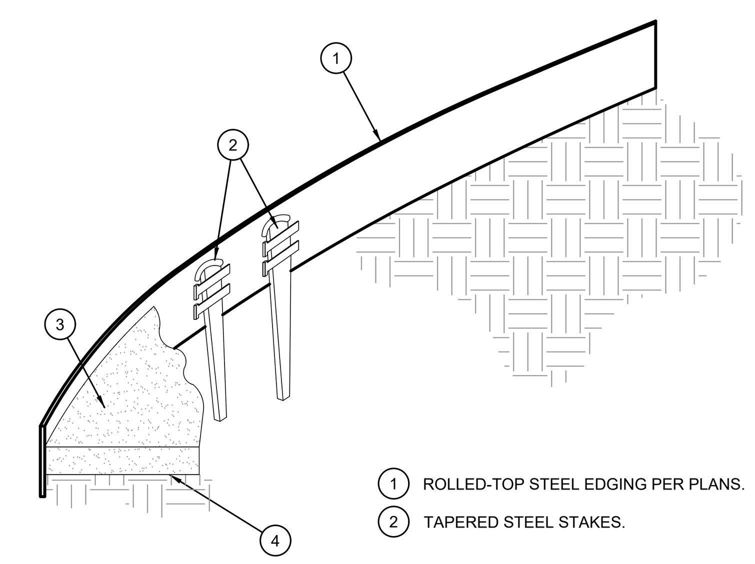

1. ROLLED-TOP STEEL EDGING PER PLANS.
2. TAPERED STEEL STAKES.
3. MULCH, TYPE AND DEPTH PER PLANS.
4. FINISH GRADE.

NOTES:
1) INSTALL EDGING SO THAT STAKES WILL BE ON INSIDE OF PLANTING BED.
2) BOTTOM OF EDGING SHALL BE BURIED A MINIMUM OF 1" BELOW FINISH GRADE.
3) TOP OF MULCH SHALL BE 1" LOWER THAN TOP OF EDGING.

C STEEL EDGING
SCALE: NOT TO SCALE

APPROVED:
I HEREBY CERTIFY THAT THE ABOVE AND FOREGOING SITE PLAN FOR A DEVELOPMENT IN THE CITY OF ROCKWALL, TEXAS, WAS APPROVED BY THE PLANNING & ZONING COMMISSION OF THE CITY OF ROCKWALL ON THE ______ DAY OF ________, _________

WITNESS OUR HANDS, THIS ______ DAY OF __________, ________

PLANNING & ZONING COMMISSION, CHAIRMAN — DIRECTOR OF PLANNING AND ZONING

National Presence. Local Expertise.
EVERGREEN DESIGN GROUP
800.680.6630
www.evergreendesigngroup.com
LANDSCAPE ARCHITECTURE
LAND PLANNING · IRRIGATION DESIGN

REVISION | DATE | NO.

TEL: 214.295.5775
URBAN STRUCTURE
8140 Walnut Hill Lane, Suite 905
Dallas, Texas 75231
Firm Registration #F-22252
www.urbanstruct.com

REGISTERED LANDSCAPE ARCHITECT — STEPHEN W. SALES — 3470 — STATE OF TEXAS
01/17/2025

PROJECT:
ADVANTAGE STORAGE
1701 STATE HIGHWAY 276
OUT OF THE JAMES M. ALLEN SURVEY, ABSTRACT NO. 2
CITY OF ROCKWALL, ROCKWALL COUNTY, TEXAS

SHEET TITLE:
PLANTING DETAILS & SPECS

PREPARED ON: 07/14/2022
CLIENT: ADVANTAGE STORAGE
DRAWN BY: LL
DESIGNER: LL
REVIEWER: BP
U.S. PROJECT: 22577

SHEET
LP-2

CITY CASE NO. ######

FILE NAME: ADVANTAGE STORAGE-ROCKWALL LP_2025-01-16.DWG
FILE LOCATION: P:\Shared\Projects\2022\Advantage Storage - Rockwall TX\Advantage Storage-Rockwall LP_2025-01-16.dwg
LAST MODIFIED ON: 1/17/2025 3:07 PM
PLOTTED ON: 1/17/2025 3:16 PM

Atmos Energy Approved Vegetation

The following plants are allowed on Atmos Energy's right of way. These plants have less than 4' growth potential and a non-intrusive root system. They are also local to the North Texas climate.

Shrub

Agave
American BeautyBerry
Barberry
Cast Iron Plant
Color Guard Yucca
Compact Nandina
Drift Rose
Dwarf Boxwood
Dwarf Chinese Holly
Dwarf Indian Hawthorn
Dwarf Spiera
Dwarf Variegated
Dwarf Yaupon Holly
Flirt Nandina
Harbor Dwarf Nandina
Miniature Crape Myrtle
Rose Creek Abelia
Rosemary
Spreading Yew
Variegated Abelia
Wheeler's Dwarf

Perennial

Autumn Salvia
Black-Eyed-Susan
Blackfoot Daisy
Blue Mealy Sage
Calylophus
Cone Flower
Creeping Lantana
Daylily
Dwarf Mexican Petunia
Flame Acanthus
Garden Phlox
Gaura
Holly Fern
Lamb's Ear
Wood Fern

Ornamental Grass

Berkeley's Sedge
Gulf Muhly
Hameln's Fountain
Mexican Feather

Groundcover

Ajuga
Asian Jasmine
Creeping Juniper
Creeping Rosemary
Lirope, regular or giant
Mondo Grass
Purple Euonymus

Customer Service: 888.286.6700
atmosenergy.com/pipelinerenewal

Rose Creek Abelia

Dwarf Yaupon Holly

Daylily

Harbor Dwarf Nandina

Lily Turf

Black-Eyed Susan

Dwarf Spirea

Mexican Feather grass

Greggs Salvia

CITY OF ROCKWALL

PLANNING AND ZONING COMMISSION MEMORANDUM

PLANNING AND ZONING DEPARTMENT
385 S. GOLIAD STREET • ROCKWALL, TX 75087
PHONE: (972) 771-7745 • EMAIL: PLANNING@ROCKWALL.COM

TO:	Planning and Zoning Commission
FROM:	Bethany Ross, *Planner*
DATE:	January 28, 2025
SUBJECT:	SP2025-001; *Amended Site Plan for Advantage Storage*

The applicant, Brian Baca of ADV Rockwall John King Property Owner, LLC, is requesting the approval of an Amended Site Plan to update the landscape plan for a previously approved Mini Warehouse Facility [*i.e. Case No. SP2022-044*] and its subsequent amendment [*i.e. Case No. SP2022-062*]. The subject property is a 7.154-acre parcel of land (*i.e. Lot 1, Block 1, Cambridge Estates*), zoned Planned Development District 10 (PD-10) for Commercial (C) District land uses, and situated within the SH-205 Overlay (SH-205 OV) District and the SH-276 Overlay (SH- 276 OV) District. The subject property is generally located at the southeast corner of the intersection of John King Boulevard and Discovery Boulevard. On September 13, 2022, the Planning and Zoning Commission approved the original site plan [*i.e. Case No. SP2022-044*] for the construction of a *Mini-Warehouse Facility* (*i.e. Advantage Storage*) on the subject property. As part of this approval, the Planning and Zoning Commission approved variances to the building design standards that included: [*1*] a variance to the *Primary* and *Secondary* building materials and masonry composition, [*2*] a variance to the minimum the stone requirements, [*3*] a variance to the four (4) sided architecture requirements, and [*4*] a variance to the roof design standards. In addition, the City Council approved exceptions to the conditional land use standards for the *Mini-Warehouse* land use on September 19, 2022, that included: [*1*] an exception to the maximum number of *Mini-Warehouse* units permitted per acre, [*2*] an exception to the maximum building height, and [*3*] an exception to the roof design standards for a *Mini-Warehouse Facility*. On January 10, 2023, the Planning and Zoning Commission approved an Amended Site Plan [*i.e. Case No. SP2022-062*], which allowed for an increase in the variance to the minimum stone requirements. Following these approvals, the applicant submitted civil engineering plans, a final plat, and a building permit for the proposed *Mini-Warehouse Facility*, and the project is currently under construction. On January 17, 2025, the applicant -- *Brian Baca* -- submitted an application requesting to update the landscape plan due to issues raised by Atmos concerning the plantings proposed within the 50-foot Atmos easement on the south side of the property adjacent to SH-276.

The updated landscape plan proposes small to mid-sized shrubbery and an 18”-24” undulating berm. According to Subsection 06.02(E)(1), of Article 05, of the *General Overlay District Development Standards* of the *Unified Development Code (UDC)*, "(a)ll landscape buffers shall incorporate ground cover, a built-up berm and shrubbery or a combination thereof along the entire length of the frontage. Berms and shrubbery shall each have a minimum height of 30-inches and a maximum height of 48- inches. In addition, two (2) canopy trees and four (4) accent trees shall be planted per 100-feet of linear frontage along the Primary Roadway…" In this case, the applicant is requesting a variance to these requirements along SH-276. Specifically, the applicant is [*1*] proposing a berm that does not meet the minimum requirements, [*2*] proposing to remove all canopy trees, and [*3*] proposing to remove all accent trees. Staff should note, that in the original Site Plan case, the applicant proposed compensatory measures to off-set the requested (*above mentioned*) variances. These included: [*1*] <u>*additional shrubs along SH-276*</u>, [*2*] additional shrubs along *Building A*, [*3*] additional shrubs along *Building D*, [*4*] additional shrubs along John King Boulevard, [*5*] using more than the required 20% stone on ten (10) out of the 16 facades focusing on the facades facing the public rights-of-way, [*6*] 16.80% over the required landscape area, [*7*] more than required canopy trees in the landscape buffer along John King Boulevard, [*8*] <u>*more than the required canopy trees along SH-276*</u>, [*9*] <u>*more than the required accent trees along SH-276*</u>, [*10*] extra trees along the detention area. As noted in the original Site Plan case memo, some of these compensatory measures were associated with requirements of the Overlay Districts and were not truly compensatory measures. In addition, based on the applicant’s current request three (3) of these compensatory measures (*i.e. the ones underlined and italicized above*) would be going away with the current request. Staff should also note, that the Planning and Zoning Commission approved an amended site plan (*i.e. SP2022-062*) -- *as outlined above* -- for material changes to the building. As compensatory measures for this case, the applicant proposed: [*1*] <u>*adding large shrubs along SH-276*</u>, [*2*] adding shrubs along the front of *Building A*, and [*3*] <u>*having 37% landscaping in lieu of the required 20%*</u>. In this case the proposed request would change or remove two (2) of the three (3) compensatory measures associated with this case. With regard to the current case, the applicant is not proposing any

additional compensatory measures and would be removing five (5) of the 13 compensatory measures associated with previous variance approvals.

According to Subsection 09.01, *Exceptions to the General Standards*, of Article 11, *Development Applications and Review Procedures*, of the Unified Development Code (UDC), "…an applicant may request the Planning and Zoning Commission grant an exception to the provisions contained in the Unified Development Code (UDC), where unique or extraordinary conditions exist or where strict adherence to the technical requirements of the Unified Development Code (UDC) would create an undue hardship." In addition, the code requires that applicant provide compensatory measures that directly offset the requested exception. In this case, the applicant is *not* providing any compensatory measures to offset the requested variances to the *General Overlay District Standards* and is effectively removing five (5) of the previously provided compensatory measures with this request. Staff should also note, that the 50-foot Atmos easement was in existence prior to the applicant submitting the site plan, was depicted in the applicant's original site plan and landscape plan, and was not accounted for by the applicant in planning these landscape areas. With this being said, the applicant will need to make changes to accommodate Atmos' requirements; however, the applicant failed to account for the requirements with the original Site Plan, is removing items used to secure variances with the previous approvals, and is not proposing to provide any additional off-setting measures. Based on this, the applicant's request does not appear to be in conformance with the requirements of the Unified Development Code (UDC); however, variances to the *General Overlay District Standards* are a discretionary decision for the Planning and Zoning Commission and require a supermajority vote (*i.e. a three-fourths vote of those members present*), with a minimum of four (4) votes in the affirmative required for approval. Should the Planning and Zoning Commission have any questions concerning the applicant's request, staff and the applicant will be available at the *January 28, 2025* Planning and Zoning Commission meeting.

DEVELOPMENT APPLICATION

City of Rockwall
Planning and Zoning Department
385 S. Goliad Street
Rockwall, Texas 75087

STAFF USE ONLY

PLANNING & ZONING CASE NO.

NOTE: THE APPLICATION IS NOT CONSIDERED ACCEPTED BY THE CITY UNTIL THE PLANNING DIRECTOR AND CITY ENGINEER HAVE SIGNED BELOW.

DIRECTOR OF PLANNING:

CITY ENGINEER:

PLEASE CHECK THE APPROPRIATE BOX BELOW TO INDICATE THE TYPE OF DEVELOPMENT REQUEST [SELECT ONLY ONE BOX]:

PLATTING APPLICATION FEES:

- ☐ MASTER PLAT ($100.00 + $15.00 ACRE) [1]
- ☐ PRELIMINARY PLAT ($200.00 + $15.00 ACRE) [1]
- ☐ FINAL PLAT ($300.00 + $20.00 ACRE) [1]
- ☐ REPLAT ($300.00 + $20.00 ACRE) [1]
- ☐ AMENDING OR MINOR PLAT ($150.00)
- ☐ PLAT REINSTATEMENT REQUEST ($100.00)

SITE PLAN APPLICATION FEES:

- ☐ SITE PLAN ($250.00 + $20.00 ACRE) [1]
- ☒ AMENDED SITE PLAN/ELEVATIONS/LANDSCAPING PLAN ($100.00)

ZONING APPLICATION FEES:

- ☐ ZONING CHANGE ($200.00 + $15.00 ACRE) [1]
- ☐ SPECIFIC USE PERMIT ($200.00 + $15.00 ACRE) [1 & 2]
- ☐ PD DEVELOPMENT PLANS ($200.00 + $15.00 ACRE) [1]

OTHER APPLICATION FEES:

- ☐ TREE REMOVAL ($75.00)
- ☐ VARIANCE REQUEST/SPECIAL EXCEPTIONS ($100.00) [2]

NOTES:
[1]: IN DETERMINING THE FEE, PLEASE USE THE EXACT ACREAGE WHEN MULTIPLYING BY THE PER ACRE AMOUNT. FOR REQUESTS ON LESS THAN ONE ACRE, ROUND UP TO ONE (1) ACRE.
[2]: A *$1,000.00* FEE WILL BE ADDED TO THE APPLICATION FEE FOR ANY REQUEST THAT INVOLVES CONSTRUCTION WITHOUT OR NOT IN COMPLIANCE TO AN APPROVED BUILDING PERMIT.

PROPERTY INFORMATION [PLEASE PRINT]

ADDRESS	NE CORNER JOHN KING BLVD & SH 276				
SUBDIVISION	CAMBRIDGE ESTATES	LOT	1	BLOCK	1
GENERAL LOCATION	NE CORNER JOHN KING BLVD & SH 276				

ZONING, SITE PLAN AND PLATTING INFORMATION [PLEASE PRINT]

CURRENT ZONING	PD10 HIGHWAY OVERLAY	CURRENT USE	UNDER CONSTRUCTION		
PROPOSED ZONING	PD10 HIGHWAY OVERLAY	PROPOSED USE	MINI STORAGE		
ACREAGE	3.682	LOTS [CURRENT]	1	LOTS [PROPOSED]	1

☐ *SITE PLANS AND PLATS: BY CHECKING THIS BOX YOU ACKNOWLEDGE THAT DUE TO THE PASSAGE OF HB3167 THE CITY NO LONGER HAS FLEXIBILITY WITH REGARD TO ITS APPROVAL PROCESS, AND FAILURE TO ADDRESS ANY OF STAFF'S COMMENTS BY THE DATE PROVIDED ON THE DEVELOPMENT CALENDAR WILL RESULT IN THE DENIAL OF YOUR CASE.*

OWNER/APPLICANT/AGENT INFORMATION [PLEASE PRINT/CHECK THE PRIMARY CONTACT/ORIGINAL SIGNATURES ARE REQUIRED]

☐ OWNER	ADV Rockwall John King Property Owner LLC	☐ APPLICANT	SAME
CONTACT PERSON	BRIAN BACA	CONTACT PERSON	
ADDRESS	2221 Lakeside Blvd. Suite 1260	ADDRESS	
CITY, STATE & ZIP	Richardson, TX 75082	CITY, STATE & ZIP	
PHONE	214-308-5225	PHONE	
E-MAIL	bbaca@advconstruction.net	E-MAIL	

NOTARY VERIFICATION [REQUIRED]

BEFORE ME, THE UNDERSIGNED AUTHORITY, ON THIS DAY PERSONALLY APPEARED _____ [*OWNER*] THE UNDERSIGNED, WHO STATED THE INFORMATION ON THIS APPLICATION TO BE TRUE AND CERTIFIED THE FOLLOWING:

"I HEREBY CERTIFY THAT I AM THE OWNER FOR THE PURPOSE OF THIS APPLICATION; ALL INFORMATION SUBMITTED HEREIN IS TRUE AND CORRECT; AND THE APPLICATION FEE OF $ 100.00, TO COVER THE COST OF THIS APPLICATION, HAS BEEN PAID TO THE CITY OF ROCKWALL ON THIS THE 21 ST DAY OF JANUARY, 20 25. BY SIGNING THIS APPLICATION, I AGREE THAT THE CITY OF ROCKWALL (I.E. "CITY") IS AUTHORIZED AND PERMITTED TO PROVIDE INFORMATION CONTAINED WITHIN THIS APPLICATION TO THE PUBLIC. THE CITY IS ALSO AUTHORIZED AND PERMITTED TO REPRODUCE ANY COPYRIGHTED INFORMATION SUBMITTED IN CONJUNCTION WITH THIS APPLICATION, IF SUCH REPRODUCTION IS ASSOCIATED OR IN RESPONSE TO A REQUEST FOR PUBLIC INFORMATION."

GIVEN UNDER MY HAND AND SEAL OF OFFICE ON THIS THE 21 ST DAY OF JANUARY, 20 25.

OWNER'S SIGNATURE

NOTARY PUBLIC IN AND FOR THE STATE OF TEXAS

MY COMMISSION EXPIRES

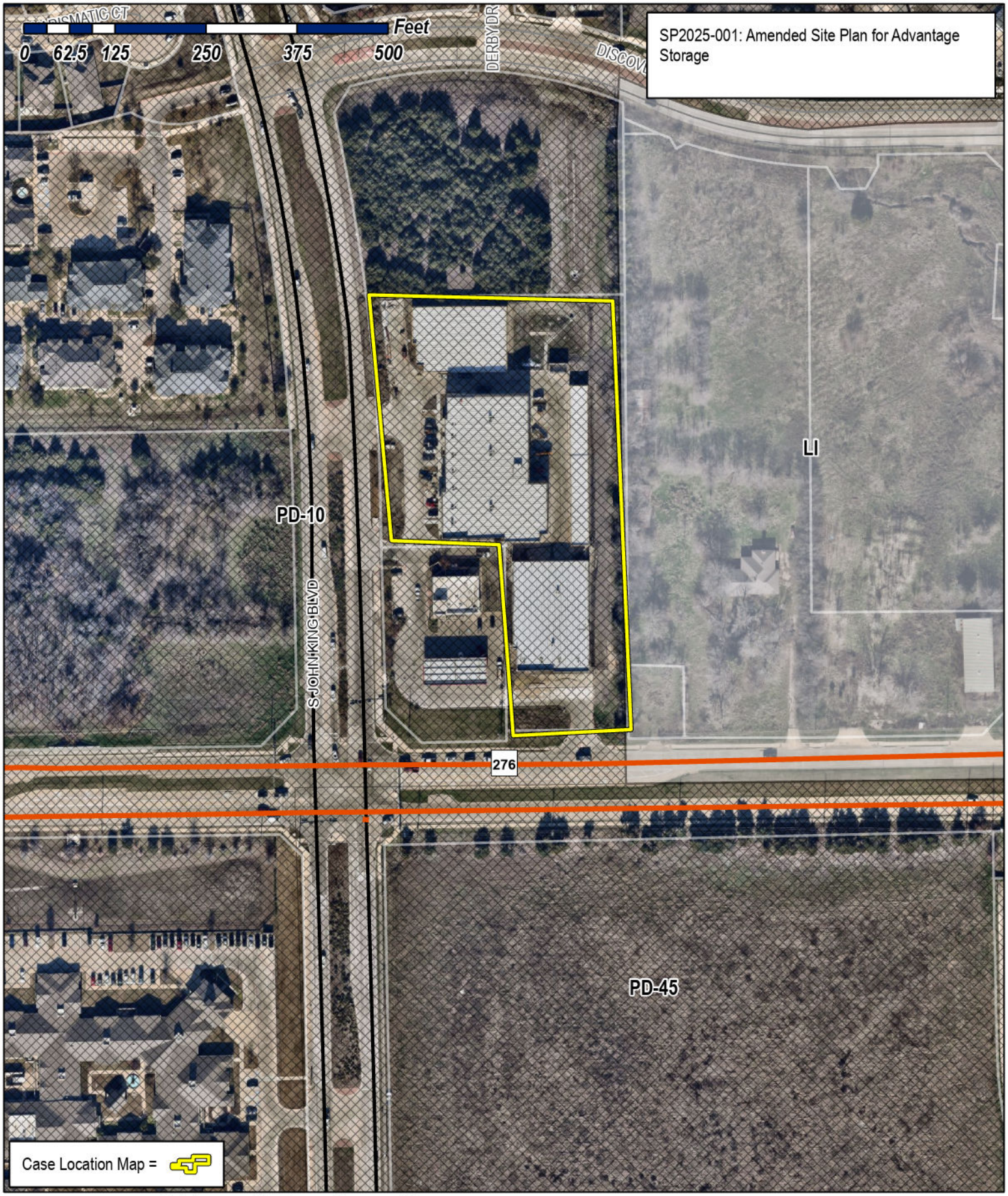

City of Rockwall

Planning & Zoning Department
385 S. Goliad Street
Rockwall, Texas 75087
(P): (972) 771-7745
(W): www.rockwall.com

The City of Rockwall GIS maps are continually under development and therefore subject to change without notice. While we endeavor to provide timely and accurate information, we make no guarantees. The City of Rockwall makes no warranty, express or implied, including warranties of merchantability and fitness for a particular purpose. Use of the information is the sole responsibility of the user.

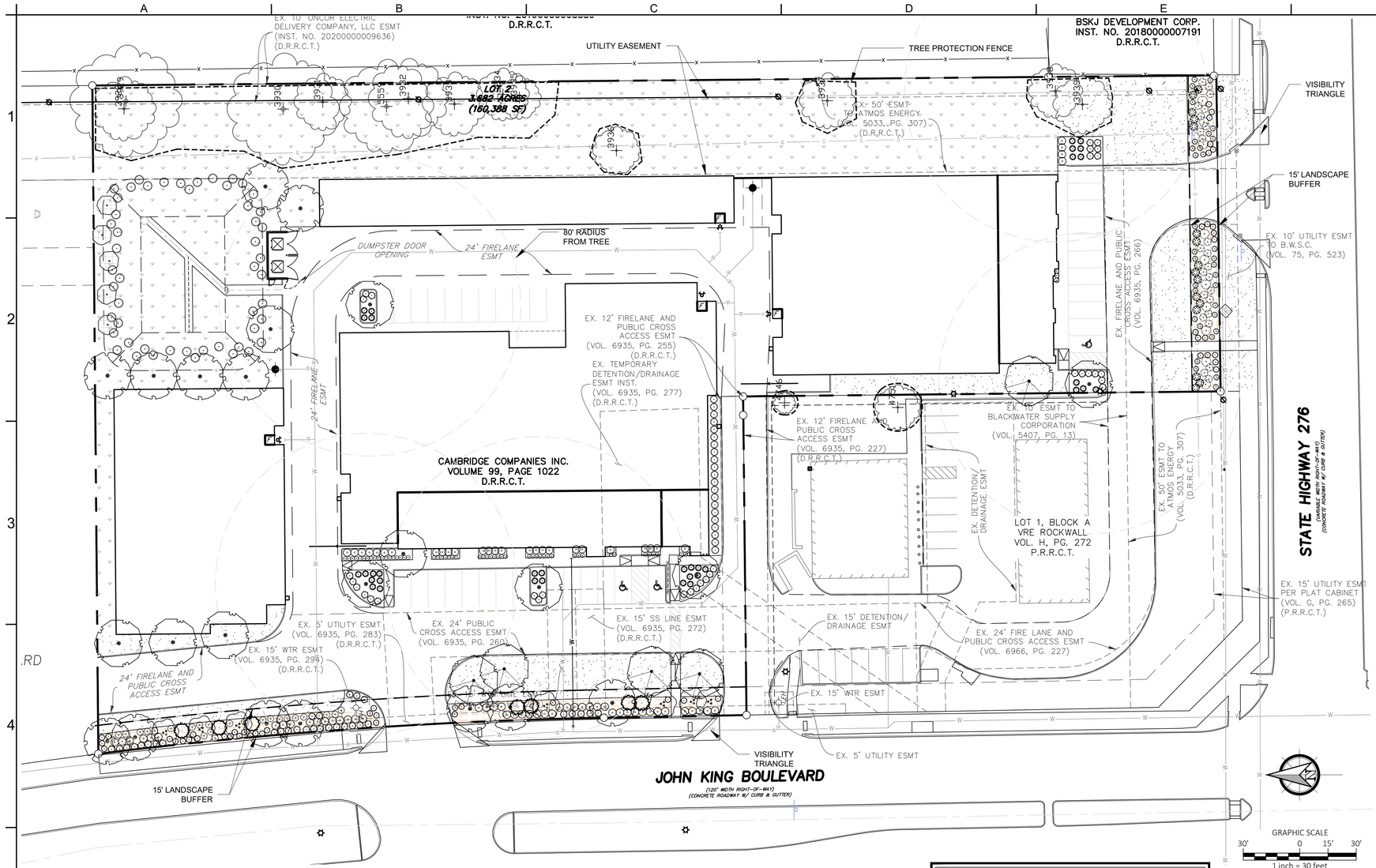

VICINITY MAP
(NOT TO SCALE)

National Presence. Local Expertise.

EVERGREEN DESIGN GROUP
800.680.6630
www.evergreendesigngroup.com
LANDSCAPE ARCHITECTURE
LAND PLANNING · IRRIGATION DESIGN

PLANT SCHEDULE

CANOPY TREES	QTY	BOTANICAL / COMMON NAME	CAL	SIZE
	5	ACER RUBRUM 'OCTOBER GLORY' OCTOBER GLORY MAPLE	4" CAL*	14'-16' HT
	13	QUERCUS MUHLENBERGIA CHINQUAPIN OAK	4" CAL*	14'-16' HT
	10	ULMUS CRASSIFOLIA CEDAR ELM	4" CAL*	16'-18' HT

*12 CANOPY TREES TO BE USED FOR MITIGATION, ALL CANOPY TREES MUST BE 4" CAL.

ACCENT TREES	QTY	BOTANICAL / COMMON NAME	CAL	SIZE
	7	CERCIS CANADENSIS EASTERN REDBUD 3-5 STEMS	3" CAL. 1" / STEM	4` -6` HT
	7	ILEX DECIDUA POSSUM HAW 3-5 STEMS	3" CAL. 1" / STEM	4` -6` HT

LARGE SHRUBS	QTY	BOTANICAL / COMMON NAME	CONT
	5	RHUS VIRENS V. VIRENS EVERGREEN SUMAC	10 GAL 4'-6' HT
	10	TAXUS CUSPIDATA SPREADING YEW	10 GAL 3'-5' HT

MEDIUM SHRUBS	QTY	BOTANICAL / COMMON NAME	CONT
	81	ILEX CORNUTA 'BURFORDII NANA' DWARF BURFORD HOLLY	5 GAL
	23	LOROPETALUM CHINENSE 'PURPLE DAYDREAM' DWARF FRINGEFLOWER	5 GAL.
	24	ILEX VOMITORIA 'NANA' DWARF YAUPON HOLLY	5 GAL
	16	NANDINA DOMESTICA ' HARBOUR DWARF' HARBOUR DWARF NANDINA	5 GAL

SMALL SHRUBS	QTY	BOTANICAL / COMMON NAME	CONT
	49	BERBERIS THUN. 'CRIMSON PYGMY' CRIMSON PYGMY BARBERRY	5 GAL.
	34	HESPERALOE PARVIFLORA RED YUCCA	3 GAL
	63	LANTANA X 'NEW GOLD' NEW GOLD LANTANA	5 GAL
	32	LANTANA MONTEVIDENSIS CREEPING LANTANA	5 GAL

ORNAMENTAL GRASSES	QTY	BOTANICAL / COMMON NAME	CONT
	51	MUHLENBERGIA RIGENS DEER GRASS	5 GAL

GROUND COVER	QTY	BOTANICAL / COMMON NAME	CONT
	53	RUELLIA BRITTONIANA 'KATIE' KATIE'S DWARF PETUNIA	3 GAL
	13,630 SF	CYNODON 'TIF-TUF' TIF-TUF HYBRID BERMUDA GRASS	SOD
	38,300 SF	BLACKLAND PRAIRIE SEED MIX NATIVE AMERICAN SEED (SEEDSOURCE.COM)	HYDROSEED

LANDSCAPE STANDARDS

05.01 LANDSCAPE BUFFERS - NON-RESIDENTIAL

REQ. ABUTTING A PUBLIC RIGHT-OF-WAY:	15' WIDE BUFFER REQ. W/ 2 CANOPY + 4 ACCENT TREE PER 100 LIN. FT. OF FRONTAGE; GROUND COVER, BUILT-UP BERM AND SHRUBBERY ALONG ENTIRE FRONTAGE, 30" HIGH, MIN.- 48" MAX. HT.
JOHN KING BLVD.: REQUIRED PLANTING: PROVIDED 15' BUFFER:	±344.8' STREET FRONTAGE 7 CANOPY TREES, 14 ACCENT TREES, BERM W/ SHRUBS 7 NEW CANOPY TREES, 14 ACCENT TREES W/ BERM AND SHRUBS (30" HIGH MIN.)
ST. HWY. 276 OVERLAY DISTRICT: ±167.8 STREET FRONTAGE	15' WIDE LANDSCAPE BUFFER W/ GR. COVER, BUILT-UP BERM & SHRUBS (30" MIN.-48" MAX) ALONG ENTIRE LENGTH OF FRONTAGE. 2 CANOPY TREES + 4 ACCENT TREES PER 100 LIN. FEET OF FRONTAGE
REQUIRED PLANTING: PROVIDED 15' BUFFER:	3 CANOPY TREES, 7 ACCENT TREES, BERM W/ SHRUBS UNABLE TO PROVIDE REQ. TREES IN BUFFER DUE TO EASEMENTS & UNDERGROUND UTILITIES (WATER, STORM, SANITARY), 10 LG SHRUBS (SUBSTITUTED FOR 7 ACCENT TREES) PLACED IN BUFFER W/ BERM & SHRUBS (30" HI MIN.-48" MAX.) PLACED IN BUFFER
EAST PROPERTY LINE BUFFER:	NOT REQUIRED. PROPERTY ZONED PD-10
NORTH PROPERTY LINE BUFFER:	NOT REQUIRED. PROPERTY ZONED LIGHT INDUSTRIAL

05.02 LANDSCAPE SCREENING

REQ. HEADLIGHT SCREENING	NOT APPLICABLE
SCREENING FROM RESIDENTIAL	NOT APPLICABLE

05.03 LANDSCAPE REQUIREMENTS - COMMERCIAL (C) DISTRICT

TOTAL SITE AREA:	±160,353 SF
LANDSCAPE AREA REQUIRED TOTAL SITE:	32,071 SF (20%)
LANDSCAPE PROVIDED, TOTAL SITE:	±58,742 SF (36.6%)
LOCATION OF LANDSCAPING:	MIN. 50% OF REQ. LANDSCAPING SHALL BE LOCATED IN THE FRONT OF & ALONG THE SIDE OF BUILDINGS W/ STREET FRONTAGE.
LANDSCAPE AREAS IN FRONT & SIDES OF BUILDINGS:	±40,718 SF (69%)
MIN. SIZE OF AREAS:	ALL REQ. LANDSCAPING SHALL BE NO LESS THAN 5' WIDE AND A MIN. OF 25 SF IN AREA
DETENTION BASIN (XERISCAPE OPTION):	MIN. (1) CANOPY TREE AND (4) SHRUB/ORNAMENTAL GRASS PER 750 SF OF DRY LAND AREA
PROPOSED DETENTION BASIN LANDSCAPING:	10,890 / 750 = 14; 14 x 4 = 56 SHRUBS + NATIVE GRASSES
PARKING LOT LANDSCAPING	MIN. 5% OR 200 SF OF LANDSCAPING, WHICHEVER IS GREATER, IN THE INTERIOR OF PARKING LOT AREA.
PROPOSED PARKING AREA:	±29,004 SF
REQ. PARKING LOT LANDSCAPING:	±1,450 SF (29,004 x 5%) AND (1) LG. CANOPY TREE FOR EVERY 10 PARKING SPACES INTERNAL TO PARKING AREAS (PARKING AREA OVER 20,000 SF) REQ. PARKING SPACES MUST BE WITHIN 80' OF A CANOPY TREE TRUNK
PROPOSED PARKING LOT LANDSCAPING:	±1,528 SF (5%) 34 PARKING SPACES / 10 = 3 TREES
TREES PROVIDED:	5 CANOPY TREES

SITE DATA TABLE

EXISTING USE:	VACANT	
PROPOSED USE:	MINI-WAREHOUSE & OFFICE SUITES	
EXISTING ZONING DISTRICT:	PLANNED DEVELOPMENT (PD-10)	
SITE AREA (LOT 2):	3.682 AC (160,388 SF)	
SITE AREA (LOT 3):	2.565 AC (111,719 SF)	
TOTAL SITE AREA:	6.247 AC (272,107 SF)	
FOR LOT 2 ONLY		
BUILDING AREA	MINI-WAREHOUSE	OFFICE SUITES
BUILDING A (3 STORIES):	69,250 SF	4,400 SF
BUILDING B (1 STORY):	11,350 SF	0 SF
BUILDING C (1 STORY):	4,000 SF	0 SF
BUILDING D (1 STORY):	13,100 SF	3,000 SF
TOTAL BUILDING AREA:	105,100 SF	
TOTAL BUILDING FOOTPRINT AREA:	56,000 SF	
TOTAL STORAGE UNITS:	635 UNITS	
	REQUIRED	PROVIDED
MAXIMUM LOT COVERAGE:	96,233 SF (60%)	56,000 SF (35%)
FLOOR TO AREA RATIO:	4:1	0.66:1
MAXIMUM BUILDING HEIGHT:	60 FT	42 FT
LANDSCAPE AREA:	32,078 SF (20%)	58,982 SF (36.8%)
	MINI-WAREHOUSE	OFFICE SUITES
PARKING REQUIRED:	9 STALLS (3 STALLS + 1/100 UNITS)	25 STALLS (1/300 SF)
TOTAL PARKING REQUIRED:	34 STALLS	
TOTAL PARKING PROVIDED:	34 STALLS	
NOTE: PD-10 REQUIRES COMMERCIAL (C) ZONING STANDARDS TO BE FOLLOWED FOR A NON-RESIDENTIAL DEVELOPMENT.		

TREE MITIGATION SUMMARY

TOTAL MITIGATION REQUIRED:	119.75"
MITIGATION PROVIDED BY PLANTING	
4" CALIPER TREES (31) TO BE PLANTED ONSITE:	124.0"
MITIGATION PROVIDED BY PURCHASING PRESERVATION CREDITS (20% OF TOTAL):	0"
TOTAL MITIGATION PROVIDED:	124.0"

CONTACT 811 BEFORE YOU DIG 811 SAFE DIGGING PARTNER

APPROVED:
I HEREBY CERTIFY THAT THE ABOVE AND FOREGOING SITE PLAN FOR A DEVELOPMENT IN THE CITY OF ROCKWALL, TEXAS, WAS APPROVED BY THE PLANNING & ZONING COMMISSION OF THE CITY OF ROCKWALL ON THE _____ DAY OF _____, _____

WITNESS OUR HANDS, THIS _____ DAY OF _____, _____

PLANNING & ZONING COMMISSION, CHAIRMAN

DIRECTOR OF PLANNING AND ZONING

MULCHES

AFTER ALL PLANTING IS COMPLETE, CONTRACTOR SHALL INSTALL 3" THICK LAYER OF 1-1/2" SHREDDED WOOD MULCH, NATURAL (UNDYED), IN ALL PLANTING AREAS (EXCEPT FOR TURF AND SEEDED AREAS). CONTRACTOR SHALL SUBMIT SAMPLES OF ALL MULCHES TO LANDSCAPE ARCHITECT AND OWNER FOR APPROVAL PRIOR TO CONSTRUCTION. ABSOLUTELY NO EXPOSED GROUND SHALL BE LEFT SHOWING ANYWHERE ON THE PROJECT AFTER MULCH HAS BEEN INSTALLED (SUBJECT TO THE CONDITIONS AND REQUIREMENTS OF THE "GENERAL GRADING AND PLANTING NOTES" AND SPECIFICATIONS).

ROOT BARRIERS

THE CONTRACTOR SHALL INSTALL ROOT BARRIERS NEAR ALL NEWLY-PLANTED TREES THAT ARE LOCATED WITHIN FIVE (5) FEET OF PAVING OR CURBS. ROOT BARRIERS SHALL BE "CENTURY" OR "DEEP-ROOT" 24" DEEP PANELS (OR EQUAL). BARRIERS SHALL BE LOCATED IMMEDIATELY ADJACENT TO HARDSCAPE. INSTALL PANELS PER MANUFACTURER'S RECOMMENDATIONS. UNDER NO CIRCUMSTANCES SHALL THE CONTRACTOR USE ROOT BARRIERS OF A TYPE THAT COMPLETELY ENCIRCLE THE ROOTBALL.

UTILITY SCREENING NOTE:
GROUND MOUNTED EQUIPMENT AND AIR CONDITIONING UNITS SHALL BE SCREENED UTILIZING PLANTINGS, BERMS, WALLS MATCHING THE MAIN STRUCTURE, OR AN ARCHITECTURAL FEATURE THAT IS INTEGRAL TO THE BUILDING'S DESIGN.

NO.	DATE	REVISION

TEL: 214.295.5775
URBAN STRUCTURE
8140 Walnut Hill Lane, Suite 905
Dallas, Texas 75231
Firm Registration #F-2232
www.urbanstruct.com

REGISTERED LANDSCAPE ARCHITECT
STEPHEN W. SALES
3470
STATE OF TEXAS
01/22/2025

ADVANTAGE STORAGE
1701 STATE HIGHWAY 276
OUT OF THE JAMES M. ALLEN SURVEY, ABSTRACT NO. 2
CITY OF ROCKWALL, ROCKWALL COUNTY, TEXAS

LANDSCAPE PLANTING PLAN

PROJECT:
PREPARED ON: 07/14/2022
CLIENT: ADVANTAGE STORAGE
DRAWN BY: LL
DESIGNER: LL
REVIEWER: BP
U.S. PROJECT: 23577

SHEET TITLE:

SHEET
LP-1

CITY CASE NO. ######

PLANTING SPECIFICATIONS

GENERAL

A. QUALIFICATIONS OF LANDSCAPE CONTRACTOR
1. ALL LANDSCAPE WORK SHOWN ON THESE PLANS SHALL BE PERFORMED BY A SINGLE FIRM SPECIALIZING IN LANDSCAPE PLANTING.
2. A LIST OF SUCCESSFULLY COMPLETED PROJECTS OF THIS TYPE, SIZE AND NATURE MAY BE REQUESTED BY THE OWNER FOR FURTHER QUALIFICATION MEASURES.
3. THE LANDSCAPE CONTRACTOR SHALL HOLD A VALID NURSERY AND FLORAL CERTIFICATE ISSUED BY THE TEXAS DEPARTMENT OF AGRICULTURE, AS WELL AS OPERATE UNDER A COMMERCIAL PESTICIDE APPLICATOR LICENSE ISSUED BY EITHER THE TEXAS DEPARTMENT OF AGRICULTURE OR THE TEXAS STRUCTURAL PEST CONTROL BOARD.

B. SCOPE OF WORK
1. WORK COVERED BY THESE SECTIONS INCLUDES THE FURNISHING AND PAYMENT OF ALL MATERIALS, LABOR, SERVICES, EQUIPMENT, LICENSES, TAXES AND ANY OTHER ITEMS THAT ARE NECESSARY FOR THE EXECUTION, INSTALLATION AND COMPLETION OF ALL WORK, SPECIFIED HEREIN AND / OR SHOWN ON THE LANDSCAPE PLANS, NOTES, AND DETAILS.
2. ALL WORK SHALL BE PERFORMED IN ACCORDANCE WITH ALL APPLICABLE LAWS, CODES AND REGULATIONS REQUIRED BY AUTHORITIES HAVING JURISDICTION OVER SUCH WORK, INCLUDING ALL INSPECTIONS AND PERMITS REQUIRED BY FEDERAL, STATE AND LOCAL AUTHORITIES IN SUPPLY, TRANSPORTATION AND INSTALLATION OF MATERIALS.
3. THE LANDSCAPE CONTRACTOR SHALL VERIFY THE LOCATION OF ALL UNDERGROUND UTILITY LINES (WATER, SEWER, ELECTRICAL, TELEPHONE, GAS, CABLE, TELEVISION, ETC.) PRIOR TO THE START OF ANY WORK.

PRODUCTS

A. ALL MANUFACTURED PRODUCTS SHALL BE NEW.
B. CONTAINER AND BALLED-AND-BURLAPPED PLANTS:
1. FURNISH NURSERY-GROWN PLANTS COMPLYING WITH ANSI Z60.1-2014. PROVIDE WELL-SHAPED, FULLY BRANCHED, HEALTHY, VIGOROUS STOCK FREE OF DISEASE, INSECTS, EGGS, LARVAE, AND DEFECTS SUCH AS KNOTS, SUN SCALD, INJURIES, ABRASIONS, AND DISFIGUREMENT. ALL PLANTS WITHIN A SPECIES SHALL HAVE SIMILAR SIZE, AND SHALL BE OF A FORM TYPICAL FOR THE SPECIES. ALL TREES SHALL BE OBTAINED FROM SOURCES WITHIN 200 MILES OF THE PROJECT SITE, AND WITH SIMILAR CLIMACTIC CONDITIONS.
2. ROOT SYSTEMS SHALL BE HEALTHY, DENSELY BRANCHED ROOT SYSTEMS, NON-POT-BOUND, FREE FROM ENCIRCLING AND/OR GIRDLING ROOTS, AND FREE FROM ANY OTHER ROOT DEFECTS (SUCH AS J-SHAPED ROOTS).
3. TREES MAY BE PLANTED FROM CONTAINERS OR BALLED-AND-BURLAPPED (B&B), UNLESS SPECIFIED ON THE PLANTING LEGEND. BARE-ROOT TREES ARE NOT ACCEPTABLE.
4. ANY PLANT DEEMED UNACCEPTABLE BY THE LANDSCAPE ARCHITECT OR OWNER SHALL BE IMMEDIATELY REMOVED FROM THE SITE AND SHALL BE REPLACED WITH AN ACCEPTBLE PLANT OF LIKE TYPE AND SIZE AT THE CONTRACTOR'S OWN EXPENSE. ANY PLANTS APPEARING TO BE UNHEALTHY, EVEN IF DETERMINED TO STILL BE ALIVE, SHALL NOT BE ACCEPTED. THE LANDSCAPE ARCHITECT AND OWNER SHALL BE THE SOLE JUDGES AS TO THE ACCEPTABILITY OF PLANT MATERIAL.
5. ALL TREES SHALL BE STANDARD IN FORM, UNLESS OTHERWISE SPECIFIED. TREES WITH CENTRAL LEADERS WILL NOT BE ACCEPTED IF LEADER IS DAMAGED OR REMOVED. PRUNE ALL DAMAGED TWIGS AFTER PLANTING.
6. CALIPER MEASUREMENTS FOR STANDARD (SINGLE TRUNK) TREES SHALL BE AS FOLLOWS: SIX INCHES ABOVE THE ROOT FLARE FOR TREES UP TO AND INCLUDING FOUR INCHES IN CALIPER, AND TWELVE INCHES ABOVE THE ROOT FLARE FOR TREES EXCEEDING FOUR INCHES IN CALIPER.
7. MULTI-TRUNK TREES SHALL BE MEASURED BY THEIR OVERALL HEIGHT, MEASURED FROM THE TOP OF THE ROOT BALL. WHERE CALIPER MEASUREMENTS ARE USED, THE CALIPER SHALL BE CALCULATED AS ONE-HALF OF THE SUM OF THE CALIPER OF THE THREE LARGEST TRUNKS.
8. ANY TREE OR SHRUB SHOWN TO HAVE EXCESS SOIL PLACED ON TOP OF THE ROOT BALL, SO THAT THE ROOT FLARE HAS BEEN COMPLETELY COVERED, SHALL BE REJECTED.

C. SOD: PROVIDE WELL-ROOTED SOD OF THE VARIETY NOTED ON THE PLANS. SOD SHALL BE CUT FROM HEALTHY, MATURE TURF WITH SOIL THICKNESS OF 3/4" TO 1". EACH PALLET OF SOD SHALL BE ACCOMPANIED BY A CERTIFICATE FROM SUPPLIER STATING THE COMPOSITION OF THE SOD.
D. TOPSOIL: SANDY TO CLAY LOAM TOPSOIL, FREE OF STONES LARGER THAN ½ INCH, FOREIGN MATTER, PLANTS, ROOTS, AND SEEDS.
E. COMPOST: WELL-COMPOSTED, STABLE, AND WEED-FREE ORGANIC MATTER, pH RANGE OF 5.5 TO 8; MOISTURE CONTENT 35 TO 55 PERCENT BY WEIGHT; 100 PERCENT PASSING THROUGH 3/4-INCH SIEVE; SOLUBLE SALT CONTENT OF 5 TO 10 DECISIEMENS/M; NOT EXCEEDING 0.5 PERCENT INERT CONTAMINANTS AND FREE OF SUBSTANCES TOXIC TO PLANTINGS. NO MANURE OR ANIMAL-BASED PRODUCTS SHALL BE USED.
F. FERTILIZER: GRANULAR FERTILIZER CONSISTING OF NITROGEN, PHOSPHORUS, POTASSIUM, AND OTHER NUTRIENTS IN PROPORTIONS, AMOUNTS, AND RELEASE RATES RECOMMENDED IN A SOIL REPORT FROM A QUALIFIED SOIL-TESTING AGENCY (SEE BELOW).
G. MULCH: SIZE AND TYPE AS INDICATED ON PLANS, FREE FROM DELETERIOUS MATERIALS AND SUITABLE AS A TOP DRESSING OF TREES AND SHRUBS.
H. TREE STAKING AND GUYING
1. STAKES: 6' LONG GREEN METAL T-POSTS.
2. GUY AND TIE WIRE: ASTM A 641, CLASS 1, GALVANIZED-STEEL WIRE, 2-STRAND, TWISTED, 0.106 INCH DIAMETER.
3. STRAP CHAFING GUARD: REINFORCED NYLON OR CANVAS AT LEAST 1-1/2 INCH WIDE, WITH GROMMETS TO PROTECT TREE TRUNKS FROM DAMAGE.

I. STEEL EDGING: PROFESSIONAL STEEL EDGING, 14 GAUGE THICK X 4 INCHES WIDE, FACTORY PAINTED DARK GREEN. ACCEPTABLE MANUFACTURERS INCLUDE COL-MET OR APPROVED EQUAL.
J. PRE-EMERGENT HERBICIDES: ANY GRANULAR, NON-STAINING PRE-EMERGENT HERBICIDE THAT IS LABELED FOR THE SPECIFIC ORNAMENTALS OR TURF ON WHICH IT WILL BE UTILIZED. PRE-EMERGENT HERBICIDES SHALL BE APPLIED PER THE MANUFACTURER'S LABELED RATES.

METHODS

A. SOIL PREPARATION
1. BEFORE STARTING WORK, THE LANDSCAPE CONTRACTOR SHALL VERIFY THAT THE GRADE OF ALL LANDSCAPE AREAS ARE WITHIN +/-0.1' OF FINISH GRADE. THE CONTRACTOR SHALL NOTIFY THE OWNER IMMEDIATELY SHOULD ANY DISCREPANCIES EXIST.
2. SOIL TESTING:
a. AFTER FINISH GRADES HAVE BEEN ESTABLISHED, CONTRACTOR SHALL HAVE SOIL SAMPLES FROM THE PROJECT'S LANDSCAPE AREAS TESTED BY AN ESTABLISHED SOIL TESTING LABORATORY. EACH SAMPLE SUBMITTED TO THE LAB SHALL CONTAIN NO LESS THAN ONE QUART OF SOIL, TAKEN FROM BETWEEN THE SOIL SURFACE AND 6" DEPTH. IF NO SAMPLE LOCATIONS ARE INDICATED ON THE PLANS, THE CONTRACTOR SHALL TAKE A MINIMUM OF THREE SAMPLES FROM VARIOUS REPRESENTATIVE LOCATIONS FOR TESTING.
b. THE CONTRACTOR SHALL HAVE THE SOIL TESTING LABORATORY PROVIDE RESULTS FOR THE FOLLOWING: SOIL TEXTURAL CLASS, GENERAL SOIL FERTILITY, pH, ORGANIC MATTER CONTENT, SALT (CEC), LIME, SODIUM ADSORPTION RATIO (SAR) AND BORON CONTENT.
c. THE CONTRACTOR SHALL ALSO SUBMIT THE PROJECT'S PLANT LIST TO THE LABORATORY ALONG WITH THE SOIL SAMPLES.
d. THE SOIL REPORT PRODUCED BY THE LABORATORY SHALL CONTAIN RECOMMENDATIONS FOR THE FOLLOWING (AS APPROPRIATE): SEPARATE SOIL PREPARATION AND BACKFILL MIX RECOMMENDATIONS FOR GENERAL ORNAMENTAL PLANTS, XERIC PLANTS, TURF, AND NATIVE SEED, AS WELL AS PRE-PLANT FERTILIZER APPLICATIONS AND RECOMMENDATIONS FOR ANY OTHER SOIL RELATED ISSUES. THE REPORT SHALL ALSO PROVIDE A FERTILIZER PROGRAM FOR THE ESTABLISHMENT PERIOD AND FOR LONG-TERM MAINTENANCE.
3. THE CONTRACTOR SHALL INSTALL SOIL AMENDMENTS AND FERTILIZERS PER THE SOILS REPORT RECOMMENDATIONS. ANY CHANGE IN COST DUE TO THE SOIL REPORT RECOMMENDATIONS, EITHER INCREASE OR DECREASE, SHALL BE SUBMITTED TO THE OWNER WITH THE REPORT.
4. FOR BIDDING PURPOSES ONLY, THE SOIL PREPARATION SHALL CONSIST OF THE FOLLOWING:
a. TURF: INCORPORATE THE FOLLOWING AMENDMENTS INTO THE TOP 8" OF SOIL BY MEANS OF ROTOTILLING AFTER CROSS-RIPPING:
i. NITROGEN STABILIZED ORGANIC AMENDMENT - 4 CU. YDS. PER 1,000 S.F.
ii. PREPLANT TURF FERTILIZER (10-20-10 OR SIMILAR, SLOW RELEASE, ORGANIC) - 15 LBS PER 1,000 S.F.
iii. "CLAY BUSTER" OR EQUAL - USE MANUFACTURER'S RECOMMENDED RATE
b. TREES, SHRUBS, AND PERENNIALS: INCORPORATE THE FOLLOWING AMENDMENTS INTO THE TOP 8" OF SOIL BY MEANS OF ROTOTILLING AFTER CROSS-RIPPING:
i. NITROGEN STABILIZED ORGANIC AMENDMENT - 4 CU. YDS. PER 1,000 S.F.
ii. 12-12-12 FERTILIZER (OR SIMILAR, ORGANIC, SLOW RELEASE) - 10 LBS. PER CU. YD.
iii. "CLAY BUSTER" OR EQUAL - USE MANUFACTURER'S RECOMMENDED RATE
iv. IRON SULPHATE - 2 LBS. PER CU. YD.
5. IN THE CONTEXT OF THESE PLANS, NOTES, AND SPECIFICATIONS, "FINISH GRADE" REFERS TO THE FINAL ELEVATION OF THE SOIL SURFACE (NOT TOP OF MULCH) AS INDICATED ON THE GRADING PLANS.
a. BEFORE STARTING WORK, THE LANDSCAPE CONTRACTOR SHALL VERIFY THAT THE ROUGH GRADES OF ALL LANDSCAPE AREAS ARE WITHIN +/-0.1' OF FINISH GRADE. SEE SPECIFICATIONS FOR MORE DETAILED INSTRUCTION ON TURF AREA AND PLANTING BED PREPARATION.
b. CONSTRUCT AND MAINTAIN FINISH GRADES AS SHOWN ON GRADING PLANS, AND CONSTRUCT AND MAINTAIN SLOPES AS RECOMMENDED BY THE GEOTECHNICAL REPORT. ALL LANDSCAPE AREAS SHALL HAVE POSITIVE DRAINAGE AWAY FROM STRUCTURES AT THE MINIMUM SLOPE SPECIFIED IN THE REPORT AND ON THE GRADING PLANS, AND AREAS OF POTENTIAL PONDING SHALL BE REGRADED TO BLEND IN WITH THE SURROUNDING GRADES AND ELIMINATE PONDING POTENTIAL.
c. THE LANDSCAPE CONTRACTOR SHALL DETERMINE WHETHER OR NOT THE EXPORT OF ANY SOIL WILL BE NEEDED, TAKING INTO ACCOUNT THE ROUGH GRADE PROVIDED, THE AMOUNT OF SOIL AMENDMENTS TO BE ADDED (**BASED ON A SOIL TEST**, PER SPECIFICATIONS), AND THE FINISH GRADES TO BE ESTABLISHED.
d. ENSURE THAT THE FINISH GRADE IN SHRUB AREAS IMMEDIATELY ADJACENT TO WALKS AND OTHER WALKING SURFACES, AFTER INSTALLING SOIL AMENDMENTS, IS 3" BELOW THE ADJACENT FINISH SURFACE, IN ORDER TO ALLOW FOR PROPER MULCH DEPTH. TAPER THE SOIL SURFACE TO MEET FINISH GRADE, AS SPECIFIED ON THE GRADING PLANS, AT APPROXIMATELY 18" AWAY FROM THE WALKS.
e. ENSURE THAT THE FINISH GRADE IN TURF AREAS IMMEDIATELY ADJACENT TO WALKS AND OTHER WALKING SURFACES, AFTER INSTALLING SOIL AMENDMENTS, IS 1" BELOW THE FINISH SURFACE OF THE WALKS. TAPER THE SOIL SURFACE TO MEET FINISH GRADE, AS SPECIFIED ON THE GRADING PLANS, AT APPROXIMATELY 18" AWAY FROM THE WALKS.
f. SHOULD ANY CONFLICTS AND/OR DISCREPANCIES ARISE BETWEEN THE GRADING PLANS, GEOTECHNICAL REPORT, THESE NOTES AND PLANS, AND ACTUAL CONDITIONS, THE CONTRACTOR SHALL IMMEDIATELY BRING SUCH ITEMS TO THE ATTENTION OF THE LANDSCAPE ARCHITECT, GENERAL CONTRACTOR, AND OWNER.
6. ONCE SOIL PREPARATION IS COMPLETE, THE LANDSCAPE CONTRACTOR SHALL ENSURE THAT THERE ARE NO DEBRIS, TRASH, OR STONES LARGER THAN 1" REMAINING IN THE TOP 6" OF SOIL.

B. SUBMITTALS
1. THE CONTRACTOR SHALL PROVIDE SUBMITTALS AND SAMPLES, IF REQUIRED, TO THE LANDSCAPE ARCHITECT, AND RECEIVE APPROVAL IN WRITING FOR SUCH SUBMITTALS BEFORE WORK COMMENCES.
2. SUBMITTALS SHALL INCLUDE PHOTOS OF PLANTS WITH A RULER OR MEASURING STICK FOR SCALE, PHOTOS OR SAMPLES OF ANY REQUIRED MULCHES, AND SOIL TEST RESULTS AND PREPARATION RECOMMENDATIONS FROM THE TESTING LAB (INCLUDING COMPOST AND FERTILIZER RATES AND TYPES, AND OTHER AMENDMENTS FOR TREE/SHRUB, TURF, AND SEED AREAS AS MAY BE APPROPRIATE).
3. SUBMITTALS SHALL ALSO INCLUDE MANUFACTURER CUT SHEETS FOR PLANTING ACCESSORIES SUCH AS TREE STAKES AND TIES, EDGING, AND LANDSCAPE FABRICS (IF ANY).
4. WHERE MULTIPLE ITEMS ARE SHOWN ON A PAGE, THE CONTRACTOR SHALL CLEARLY INDICATE THE ITEM BEING CONSIDERED.

C. GENERAL PLANTING
1. REMOVE ALL NURSERY TAGS AND STAKES FROM PLANTS.
2. EXCEPT IN AREAS TO BE PLANTED WITH ORNAMENTAL GRASSES, APPLY PRE-EMERGENT HERBICIDES AT THE MANUFACTURER'S RECOMMENDED RATE.
3. TRENCHING NEAR EXISTING TREES:
a. CONTRACTOR SHALL NOT DISTURB ROOTS 1-1/2" AND LARGER IN DIAMETER WITHIN THE CRITICAL ROOT ZONE (CRZ) OF EXISTING TREES, AND SHALL EXERCISE ALL POSSIBLE CARE AND PRECAUTIONS TO AVOID INJURY TO TREE ROOTS, TRUNKS, AND BRANCHES. THE CRZ IS DEFINED AS A CIRCULAR AREA EXTENDING OUTWARD FROM THE TREE TRUNK, WITH A RADIUS EQUAL TO 1' FOR EVERY 1" OF TRUNK DIAMETER-AT-BREAST-HEIGHT (4.5' ABOVE THE AVERAGE GRADE AT THE TRUNK).
b. ALL EXCAVATION WITHIN THE CRZ SHALL BE PERFORMED USING HAND TOOLS. NO MACHINE EXCAVATION OR TRENCHING OF ANY KIND SHALL BE ALLOWED WITHIN THE CRZ.
c. ALTER ALIGNMENT OF PIPE TO AVOID TREE ROOTS 1-1/2" AND LARGER IN DIAMETER. WHERE TREE ROOTS 1-1/2" AND LARGER IN DIAMETER ARE ENCOUNTERED IN THE FIELD, TUNNEL UNDER SUCH ROOTS. WRAP EXPOSED ROOTS WITH SEVERAL LAYERS OF BURLAP AND KEEP MOIST. CLOSE ALL TRENCHES WITHIN THE CANOPY DRIP LINES WITHIN 24 HOURS.
d. ALL SEVERED ROOTS SHALL BE HAND PRUNED WITH SHARP TOOLS AND ALLOWED TO AIR-DRY. DO NOT USE ANY SORT OF SEALERS OR WOUND PAINTS.

D. TREE PLANTING
1. TREE PLANTING HOLES SHALL BE EXCAVATED TO MINIMUM WIDTH OF TWO TIMES THE WIDTH OF THE ROOTBALL, AND TO A DEPTH EQUAL TO THE DEPTH OF THE ROOTBALL LESS TWO TO FOUR INCHES.
2. SCARIFY THE SIDES AND BOTTOM OF THE PLANTING HOLE PRIOR TO THE PLACEMENT OF THE TREE. REMOVE ANY GLAZING THAT MAY HAVE BEEN CAUSED DURING THE EXCAVATION OF THE HOLE.
3. FOR CONTAINER AND BOX TREES, TO REMOVE ANY POTENTIALLY GIRDLING ROOTS AND OTHER ROOT DEFECTS, THE CONTRACTOR SHALL SHAVE A 1" LAYER OFF OF THE SIDES AND BOTTOM OF THE ROOTBALL OF ALL TREES JUST BEFORE PLACING INTO THE PLANTING PIT. DO NOT "TEASE" ROOTS OUT FROM THE ROOTBALL.
4. INSTALL THE TREE ON UNDISTURBED SUBGRADE SO THAT THE TOP OF THE ROOTBALL IS TWO TO FOUR INCHES ABOVE THE SURROUNDING GRADE.
5. BACKFILL THE TREE HOLE UTILIZING THE EXISTING TOPSOIL FROM ON-SITE. ROCKS LARGER THAN 1" DIA. AND ALL OTHER DEBRIS SHALL BE REMOVED FROM THE SOIL PRIOR TO THE BACKFILL. SHOULD ADDITIONAL SOIL BE REQUIRED TO ACCOMPLISH THIS TASK, USE STORED TOPSOIL FROM ON-SITE OR IMPORT ADDITIONAL TOPSOIL FROM OFF-SITE AT NO ADDITIONAL COST TO THE OWNER. IMPORTED TOPSOIL SHALL BE OF SIMILAR TEXTURAL CLASS AND COMPOSITION IN THE ON-SITE SOIL.
6. TREES SHALL NOT BE STAKED UNLESS LOCAL CONDITIONS (SUCH AS HEAVY WINDS OR SLOPES) REQUIRE STAKES TO KEEP TREES UPRIGHT. SHOULD STAKING BE REQUIRED, THE TOTAL NUMBER OF TREE STAKES (BEYOND THE MINIMUMS LISTED BELOW) WILL BE LEFT TO THE LANDSCAPE CONTRACTOR'S DISCRETION. SHOULD ANY TREES FALL OR LEAN, THE LANDSCAPE CONTRACTOR SHALL STRAIGHTEN THE TREE, OR REPLACE IT SHOULD IT BECOME DAMAGED. TREE STAKING SHALL ADHERE TO THE FOLLOWING GUIDELINES:
a. 1"-2" TREES — TWO STAKES PER TREE
b. 2-1/2"-4" TREES — THREE STAKES PER TREE
c. TREES OVER 4" CALIPER — GUY AS NEEDED
d. MULTI-TRUNK TREES — THREE STAKES PER TREE MINIMUM, QUANTITY AND POSITIONS AS NEEDED TO STABILIZE THE TREE
e. MULTI-TRUNK TREES — THREE STAKES PER TREE MINIMUM, QUANTITY AND POSITIONS AS NEEDED TO STABILIZE THE TREE
7. UPON COMPLETION OF PLANTING, CONSTRUCT AN EARTH WATERING BASIN AROUND THE TREE. COVER THE INTERIOR OF THE TREE RING WITH THE WEED BARRIER CLOTH AND TOPDRESS WITH MULCH (TYPE AND DEPTH PER PLANS).

E. SHRUB, PERENNIAL, AND GROUNDCOVER PLANTING
1. DIG THE PLANTING HOLES TWICE AS WIDE AND 2" LESS DEEP THAN EACH PLANT'S ROOTBALL. INSTALL THE PLANT IN THE HOLE. BACKFILL AROUND THE PLANT WITH SOIL AMENDED PER SOIL TEST RECOMMENDATIONS.
2. INSTALL THE WEED BARRIER CLOTH, OVERLAPPING IT AT THE ENDS. UTILIZE STEEL STAPLES TO KEEP THE WEED BARRIER CLOTH IN PLACE.
3. WHEN PLANTING IS COMPLETE, INSTALL MULCH (TYPE AND DEPTH PER PLANS) OVER ALL PLANTING BEDS, COVERING THE ENTIRE PLANTING AREA.

F. SODDING
1. SOD VARIETY TO BE AS SPECIFIED ON THE LANDSCAPE PLAN.
2. LAY SOD WITHIN 24 HOURS FROM THE TIME OF STRIPPING. DO NOT LAY IF THE GROUND IS FROZEN.
3. LAY THE SOD TO FORM A SOLID MASS WITH TIGHTLY FITTED JOINTS. BUTT ENDS AND SIDES OF SOD STRIPS - DO NOT OVERLAP. STAGGER STRIPS TO OFFSET JOINTS IN ADJACENT COURSES.
4. ROLL THE SOD TO ENSURE GOOD CONTACT OF THE SOD'S ROOT SYSTEM WITH THE SOIL UNDERNEATH.
5. WATER THE SOD THOROUGHLY WITH A FINE SPRAY IMMEDIATELY AFTER PLANTING TO OBTAIN AT LEAST SIX INCHES OF PENETRATION INTO THE SOIL BELOW THE SOD.

G. MULCH
1. INSTALL MULCH TOPDRESSING, TYPE AND DEPTH PER MULCH NOTE, IN ALL PLANTING AREAS AND TREE RINGS.
2. DO NOT INSTALL MULCH WITHIN 6" OF TREE ROOT FLARE AND WITHIN 24" OF HABITABLE STRUCTURES, EXCEPT AS MAY BE NOTED ON THESE PLANS. MULCH COVER WITHIN 6" OF CONCRETE WALKS AND CURBS SHALL NOT PROTRUDE ABOVE THE FINISH SURFACE OF THE WALKS AND CURBS. MULCH COVER WITHIN 12" OF WALLS SHALL BE AT LEAST 3" LOWER THAN THE TOP OF WALL.

H. CLEAN UP
1. DURING LANDSCAPE PREPARATION AND PLANTING, KEEP ALL PAVEMENT CLEAN AND ALL WORK AREAS IN A NEAT, ORDERLY CONDITION.
2. DISPOSED LEGALLY OF ALL EXCAVATED MATERIALS OFF THE PROJECT SITE.

I. INSPECTION AND ACCEPTANCE
1. UPON COMPLETION OF THE WORK, THE LANDSCAPE CONTRACTOR SHALL PROVIDE THE SITE CLEAN, FREE OF DEBRIS AND TRASH, AND SUITABLE FOR USE AS INTENDED. THE LANDSCAPE CONTRACTOR SHALL THEN REQUEST AN INSPECTION BY THE OWNER TO DETERMINE FINAL ACCEPTABILITY.
2. WHEN THE INSPECTED PLANTING WORK DOES NOT COMPLY WITH THE CONTRACT DOCUMENTS, THE LANDSCAPE CONTRACTOR SHALL REPLACE AND/OR REPAIR THE REJECTED WORK TO THE OWNER'S SATISFACTION WITHIN 24 HOURS.
3. THE LANDSCAPE MAINTENANCE PERIOD WILL NOT COMMENCE UNTIL THE LANDSCAPE WORK HAS BEEN RE-INSPECTED BY THE OWNER AND FOUND TO BE ACCEPTABLE. AT THAT TIME, A WRITTEN NOTICE OF FINAL ACCEPTANCE WILL BE ISSUED BY THE OWNER, AND THE MAINTENANCE AND GUARANTEE PERIODS WILL COMMENCE.

J. LANDSCAPE MAINTENANCE
1. THE LANDSCAPE CONTRACTOR SHALL BE RESPONSIBLE FOR THE MAINTENANCE OF ALL WORK SHOWN ON THESE PLANS FOR 90 DAYS BEYOND FINAL ACCEPTANCE OF ALL LANDSCAPE WORK BY THE OWNER. LANDSCAPE MAINTENANCE SHALL INCLUDE WEEKLY SITE VISITS FOR THE FOLLOWING ACTIONS (AS APPROPRIATE): PROPER PRUNING, RESTAKING OF TREES, RESETTING OF PLANTS THAT HAVE SETTLED, MOWING AND AERATION OF LAWNS, WEEDING, TREATING FOR INSECTS AND DISEASES,REPLACEMENT OF MULCH, REMOVAL OF LITTER, REPAIRS TO THE IRRIGATION SYSTEM DUE TO FAULTY PARTS AND/OR WORKMANSHIP, AND THE APPROPRIATE WATERING OF ALL PLANTINGS. THE LANDSCAPE CONTRACTOR SHALL MAINTAIN THE IRRIGATION SYSTEM IN PROPER WORKING ORDER, WITH SCHEDULING ADJUSTMENTS BY SEASON TO MAXIMIZE WATER CONSERVATION.
2. SHOULD SEEDED AND/OR SODDED AREAS NOT BE COVERED BY AN AUTOMATIC IRRIGATION SYSTEM, THE LANDSCAPE CONTRACTOR SHALL BE RESPONSIBLE FOR WATERING THESE AREAS AND OBTAINING A FULL, HEALTHY STAND OF PLANTS AT NO ADDITIONAL COST TO THE OWNER.
3. TO ACHIEVE FINAL ACCEPTANCE AT THE END OF THE MAINTENANCE PERIOD, ALL OF THE FOLLOWING CONDITIONS MUST OCCUR:
a. THE LANDSCAPE SHALL SHOW ACTIVE, HEALTHY GROWTH (WITH EXCEPTIONS MADE FOR SEASONAL DORMANCY). ALL PLANTS NOT MEETING THIS CONDITION SHALL BE REJECTED AND REPLACED BY HEALTHY PLANT MATERIAL PRIOR TO FINAL ACCEPTANCE.
b. ALL HARDSCAPE SHALL BE CLEANED PRIOR TO FINAL ACCEPTANCE.
c. SODDED AREAS MUST BE ACTIVELY GROWING AND MUST REACH A MINIMUM HEIGHT OF 1 1/2 INCHES BEFORE FIRST MOWING. BARE AREAS LARGER THAN TWELVE SQUARE INCHES MUST BE RESODDED (AS APPROPRIATE) PRIOR TO FINAL ACCEPTANCE. ALL SODDED TURF SHALL BE NEATLY MOWED.

K. WARRANTY PERIOD, PLANT GUARANTEE AND REPLACEMENTS
1. THE LANDSCAPE CONTRACTOR SHALL GUARANTEE ALL TREES, SHRUBS, PERENNIALS, SOD, AND IRRIGATION SYSTEMS FOR A PERIOD OF ONE YEAR FROM THE DATE OF THE OWNER'S FINAL ACCEPTANCE (90 DAYS FOR ANNUAL PLANTS). THE CONTRACTOR SHALL REPLACE, AT HIS OWN EXPENSE AND TO THE SATISFACTION OF THE OWNER, ANY PLANTS WHICH DIE IN THAT TIME, OR REPAIR ANY PORTIONS OF THE IRRIGATION SYSTEM WHICH OPERATE IMPROPERLY.
2. AFTER THE INITIAL MAINTENANCE PERIOD AND DURING THE GUARANTEE PERIOD, THE LANDSCAPE CONTRACTOR SHALL ONLY BE RESPONSIBLE FOR REPLACEMENT OF PLANTS WHEN PLANT DEATH CANNOT BE ATTRIBUTED DIRECTLY TO OVERWATERING OR OTHER DAMAGE BY HUMAN ACTIONS.

L. PROVIDE A MINIMUM OF (2) COPIES OF RECORD DRAWINGS TO THE OWNER UPON COMPLETION OF WORK. A RECORD DRAWING IS A RECORD OF ALL CHANGES THAT OCCURRED IN THE FIELD AND THAT ARE DOCUMENTED THROUGH CHANGE ORDERS, ADDENDA, OR CONTRACTOR/CONSULTANT DRAWING MARKUPS.

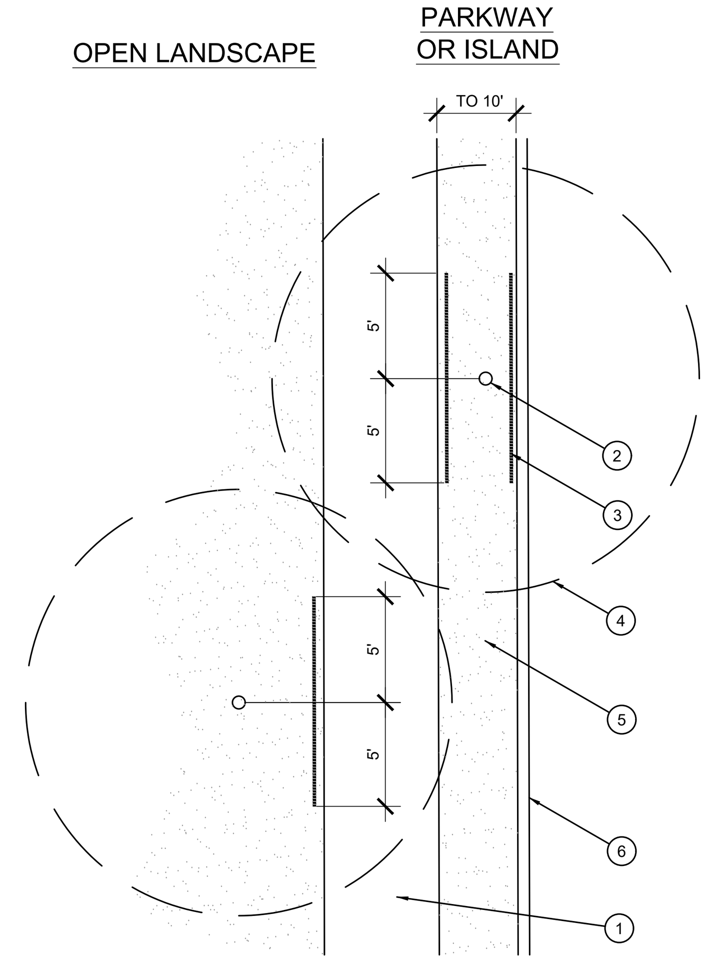

1. TYPICAL WALKWAY OR PAVING
2. TREE TRUNK
3. LINEAR ROOT BARRIER MATERIAL. SEE PLANTING NOTES FOR TYPE AND MANUFACTURER. INSTALL PER MANUFACTURER'S SPECIFICATIONS.
4. TREE CANOPY
5. TYPICAL PLANTING AREA
6. TYPICAL CURB AND GUTTER

NOTES:
1) INSTALL ROOT BARRIERS NEAR ALL NEWLY-PLANTED TREES THAT ARE LOCATED WITHIN FIVE (5) FEET OF PAVING OR CURBS.
2) BARRIERS SHALL BE LOCATED IMMEDIATELY ADJACENT TO HARDSCAPE. UNDER NO CIRCUMSTANCES SHALL THE CONTRACTOR USE ROOT BARRIERS OF A TYPE THAT COMPLETELY ENCIRCLE THE ROOTBALL.

D ROOT BARRIER - PLAN VIEW
SCALE: NOT TO SCALE

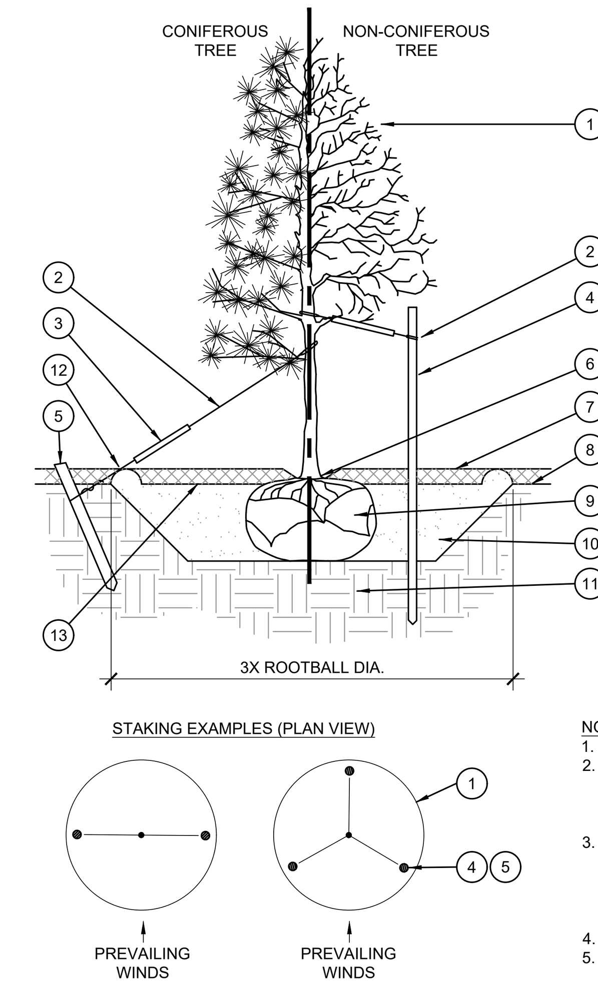

1. TREE CANOPY.
2. CINCH-TIES (24" BOX/2" CAL. TREES AND SMALLER) OR 12 GAUGE GALVANIZED WIRE WITH NYLON TREE STRAPS AT TREE AND STAKE (36" BOX/2.5" CAL. TREES AND LARGER). SECURE TIES OR STRAPS TO TRUNK JUST ABOVE LOWEST MAJOR BRANCHES.
3. 24" X 3/4" P.V.C. MARKERS OVER WIRES.
4. GREEN STEEL T-POSTS. EXTEND POSTS 12" MIN. INTO UNDISTURBED SOIL.
5. PRESSURE-TREATED WOOD DEADMAN, TWO PER TREE (MIN.). BURY OUTSIDE OF PLANTING PIT AND 18" MIN. INTO UNDISTURBED SOIL.
6. TRUNK FLARE.
7. MULCH, TYPE AND DEPTH PER PLANS. DO NOT PLACE MULCH WITHIN 6" OF TRUNK.
8. FINISH GRADE.
9. ROOT BALL.
10. BACKFILL. AMEND AND FERTILIZE ONLY AS RECOMMENDED IN SOIL FERTILITY ANALYSIS.
11. UNDISTURBED NATIVE SOIL.
12. 4" HIGH EARTHEN WATERING BASIN.
13. FINISH GRADE.

NOTES:
1. SCARIFY SIDES OF PLANTING PIT PRIOR TO SETTING TREE.
2. REMOVE EXCESS SOIL APPLIED ON TOP OF THE ROOTBALL THAT COVERS THE ROOT FLARE. THE PLANTING HOLE DEPTH SHALL BE SUCH THAT THE ROOTBALL RESTS ON UNDISTURBED SOIL, AND THE ROOT FLARE IS 2"-4" ABOVE FINISH GRADE.
3. FOR B&B TREES, CUT OFF BOTTOM 1/3 OF WIRE BASKET BEFORE PLACING TREE IN HOLE, CUT OFF AND REMOVE REMAINDER OF BASKET AFTER TREE IS SET IN HOLE, REMOVE ALL NYLON TIES, TWINE, ROPE, AND OTHER PACKING MATERIAL. REMOVE AS MUCH BURLAP FROM AROUND ROOTBALL AS IS PRACTICAL.
4. REMOVE ALL NURSERY STAKES AFTER PLANTING.
5. FOR TREES 36" BOX/2.5" CAL. AND LARGER, USE THREE STAKES OR DEADMEN (AS APPROPRIATE), SPACED EVENLY AROUND TREE.
6. STAKING SHALL BE TIGHT ENOUGH TO PREVENT TRUNK FROM BENDING, BUT LOOSE ENOUGH TO ALLOW SOME TRUNK MOVEMENT IN WIND.

A TREE PLANTING
SCALE: NOT TO SCALE

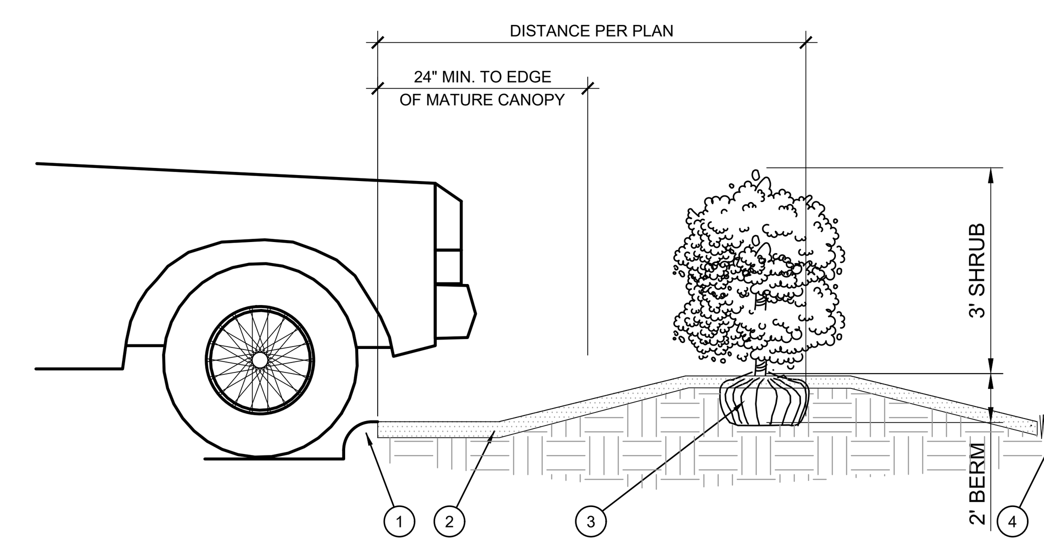

1. CURB.
2. MULCH LAYER.
3. PLANT.
4. TURF (WHERE SHOWN ON PLAN).

E PLANTING AT PARKING AREA
SCALE: NOT TO SCALE

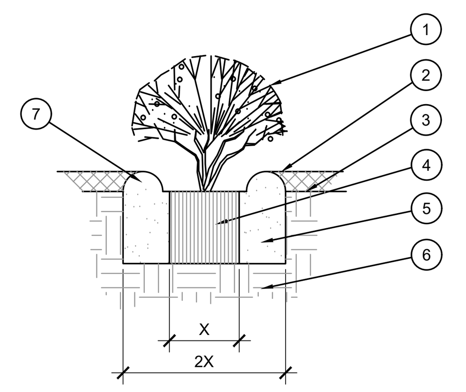

1. SHRUB, PERENNIAL, OR ORNAMENTAL GRASS.
2. MULCH, TYPE AND DEPTH PER PLANS. PLACE NO MORE THAN 1" OF MULCH WITHIN 6" OF PLANT CENTER.
3. FINISH GRADE.
4. ROOT BALL.
5. BACKFILL. AMEND AND FERTILIZE ONLY AS RECOMMENDED IN SOIL FERTILITY ANALYSIS.
6. UNDISTURBED NATIVE SOIL.
7. 3" HIGH EARTHEN WATERING BASIN.

B SHRUB AND PERENNIAL PLANTING
SCALE: NTS

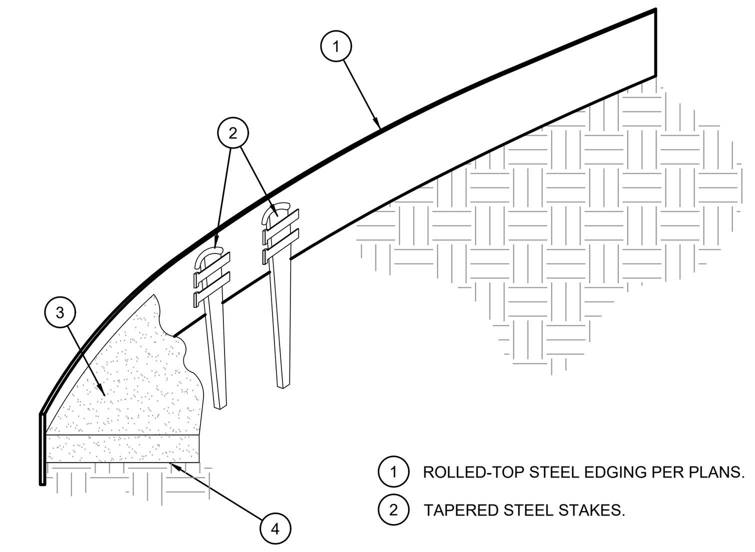

1. ROLLED-TOP STEEL EDGING PER PLANS.
2. TAPERED STEEL STAKES.
3. MULCH, TYPE AND DEPTH PER PLANS.
4. FINISH GRADE.

NOTES:
1) INSTALL EDGING SO THAT STAKES WILL BE ON INSIDE OF PLANTING BED.
2) BOTTOM OF EDGING SHALL BE BURIED A MINIMUM OF 1" BELOW FINISH GRADE.
3) TOP OF MULCH SHALL BE 1" LOWER THAN TOP OF EDGING.

C STEEL EDGING
SCALE: NOT TO SCALE

IRRIGATION CONCEPT

1. AN AUTOMATIC IRRIGATION SYSTEM SHALL BE INSTALLED AND OPERATIONAL BY THE TIME OF FINAL INSPECTION. THE ENTIRE IRRIGATION SYSTEM SHALL BE INSTALLED BY A LICENSED AND QUALIFIED IRRIGATION CONTRACTOR.
2. THE IRRIGATION SYSTEM WILL OPERATE ON POTABLE WATER, AND THE SYSTEM WILL HAVE APPROPRIATE BACKFLOW PREVENTION DEVICES INSTALLED TO PREVENT CONTAMINATION OF THE POTABLE SOURCE.
3. ALL NON-TURF PLANTED AREAS SHALL BE DRIP IRRIGATED. SODDED AND SEEDED AREAS SHALL BE IRRIGATED WITH SPRAY OR ROTOR HEADS AT 100% HEAD-TO-HEAD COVERAGE.
4. ALL PLANTS SHARING SIMILAR HYDROZONE CHARACTERISTICS SHALL BE PLACED ON A VALVE DEDICATED TO PROVIDE THE NECESSARY WATER REQUIREMENTS SPECIFIC TO THAT HYDROZONE.
5. THE IRRIGATION SYSTEM SHALL BE DESIGNED AND INSTALLED, TO THE MAXIMUM EXTENT POSSIBLE, TO CONSERVE WATER BY USING THE FOLLOWING DEVICES AND SYSTEMS: MATCHED PRECIPITATION RATE TECHNOLOGY ON ROTOR AND SPRAY HEADS (WHEREVER POSSIBLE), RAIN SENSORS, AND MULTI-PROGRAM COMPUTERIZED IRRIGATION CONTROLLERS FEATURING SENSORY INPUT CAPABILITIES.
6. ALL IRRIGATION SHALL MEET THE REQUIREMENTS OF THE CITY OF ROCKWALL'S UDC (SUBSECTION 05.04, OF ARTICLE 08)

APPROVED:
I HEREBY CERTIFY THAT THE ABOVE AND FOREGOING SITE PLAN FOR A DEVELOPMENT IN THE CITY OF ROCKWALL, TEXAS, WAS APPROVED BY THE PLANNING & ZONING COMMISSION OF THE CITY OF ROCKWALL ON THE ______ DAY OF ________, _________

WITNESS OUR HANDS, THIS ______ DAY OF __________, ________

PLANNING & ZONING COMMISSION, CHAIRMAN — DIRECTOR OF PLANNING AND ZONING

TEL: 214.295.5775
www.urbanstruct.com
URBAN STRUCTURE
8140 Walnut Hill Lane, Suite 905
Dallas, Texas 75231
Firm Registration #F-22252

REGISTERED LANDSCAPE ARCHITECT — STEPHEN W. SALES — 3470 — STATE OF TEXAS
01/22/2025

REVISION	DATE	NO.

PROJECT:
ADVANTAGE STORAGE
1701 STATE HIGHWAY 276
OUT OF THE JAMES M. ALLEN SURVEY, ABSTRACT NO. 2
CITY OF ROCKWALL, ROCKWALL COUNTY, TEXAS

SHEET TITLE:
PLANTING DETAILS & SPECS

PREPARED ON:	07/14/2022
CLIENT:	ADVANTAGE STORAGE
DRAWN BY:	LL
DESIGNER:	LL
REVIEWER:	BP
U.S. PROJECT:	22577

National Presence. Local Expertise.
EVERGREEN DESIGN GROUP
800.680.6630
www.evergreendesigngroup.com
LANDSCAPE ARCHITECTURE
LAND PLANNING · IRRIGATION DESIGN

SHEET
LP-2

CITY CASE NO. ######

FILE NAME: ADVANTAGE STORAGE-ROCKWALL LP_2025-01-22.DWG
FILE LOCATION: P:\Shared\Projects\2022\Advantage Storage - Rockwall TX\Advantage Storage-Rockwall LP_2025-01-22.dwg
LAST MODIFIED ON: 1/22/2025 2:34 PM
PLOTTED ON: 1/22/2025 2:38 PM

Atmos Energy Approved Vegetation

The following plants are allowed on Atmos Energy's right of way. These plants have less than 4' growth potential and a non-intrusive root system. They are also local to the North Texas climate.

Shrub

Agave
American BeautyBerry
Barberry
Cast Iron Plant
Color Guard Yucca
Compact Nandina
Drift Rose
Dwarf Boxwood
Dwarf Chinese Holly
Dwarf Indian Hawthorn
Dwarf Spiera
Dwarf Variegated
Dwarf Yaupon Holly
Flirt Nandina
Harbor Dwarf Nandina
Miniature Crape Myrtle
Rose Creek Abelia
Rosemary
Spreading Yew
Variegated Abelia
Wheeler's Dwarf

Perennial

Autumn Salvia
Black-Eyed-Susan
Blackfoot Daisy
Blue Mealy Sage
Calylophus
Cone Flower
Creeping Lantana
Daylily
Dwarf Mexican Petunia
Flame Acanthus
Garden Phlox
Gaura
Holly Fern
Lamb's Ear
Wood Fern

Ornamental Grass

Berkeley's Sedge
Gulf Muhly
Hameln's Fountain
Mexican Feather

Groundcover

Ajuga
Asian Jasmine
Creeping Juniper
Creeping Rosemary
Lirope, regular or giant
Mondo Grass
Purple Euonymus

Customer Service: 888.286.6700
atmosenergy.com/pipelinerenewal

Rose Creek Abelia

Dwarf Yaupon Holly

Daylily

Harbor Dwarf Nandina

Lily Turf

Black-Eyed Susan

Dwarf Spirea

Mexican Feather grass

Greggs Salvia

PAVEMENT LEGEND

- EXISTING PAVEMENT
- HEAVY DUTY CONCRETE PAVEMENT
- LIGHT DUTY CONCRETE PAVEMENT

ITE TRIP GENERATION TOTAL=
$105{,}416/_{1000}$ X 0.17 = 18 TRIPS/DAY PEAK HOUR

SITE DATA TABLE

EXISTING USE:	VACANT	
PROPOSED USE:	MINI-WAREHOUSE & OFFICE SUITES	
EXISTING ZONING DISTRICT:	PLANNED DEVELOPMENT (PD-10)	
SITE AREA (LOT 2):	3.682 AC (160,388 SF)	
SITE AREA (LOT 3):	2.565 AC (111,719 SF)	
TOTAL SITE AREA:	6.247 AC (272,107 SF)	
FOR LOT 2 ONLY		
BUILDING AREA	MINI-WAREHOUSE	OFFICE SUITES
BUILDING A (3 STORIES):	73,408 SF	4,400 SF
BUILDING B (1 STORY):	11,350 SF	0 SF
BUILDING C (1 STORY):	5,500 SF	0 SF
BUILDING D (1 STORY):	15,534 SF	2,961 SF
TOTAL BUILDING AREA:	105,792 SF	
TOTAL BUILDING FOOTPRINT AREA:	56,582 SF	
TOTAL STORAGE UNITS:	635 UNITS	
	REQUIRED	PROVIDED
MAXIMUM LOT COVERAGE:	96,233 SF (60%)	56,500 SF (35%)
FLOOR TO AREA RATIO:	4:1	0.66:1
MAXIMUM BUILDING HEIGHT:	60 FT	42 FT
LANDSCAPE AREA:	32,078 SF (20%)	58,982 SF (36.8%)
	MINI-WAREHOUSE	OFFICE SUITES
PARKING REQUIRED:	9 STALLS (3 STALLS + 1/100 UNITS)	25 STALLS (1/300 SF)
TOTAL PARKING REQUIRED:	34 STALLS	
TOTAL PARKING PROVIDED:	34 STALLS	

NOTE: PD-10 REQUIRES COMMERCIAL (C) ZONING STANDARDS TO BE FOLLOWED FOR A NON-RESIDENTIAL DEVELOPMENT.

VICINITY MAP
(NOT TO SCALE)

GRAPHIC SCALE
40 0 20 40
(IN FEET)
1 inch = 40 ft.

TOCS
1-800-245-4545
txticket@1-call.com

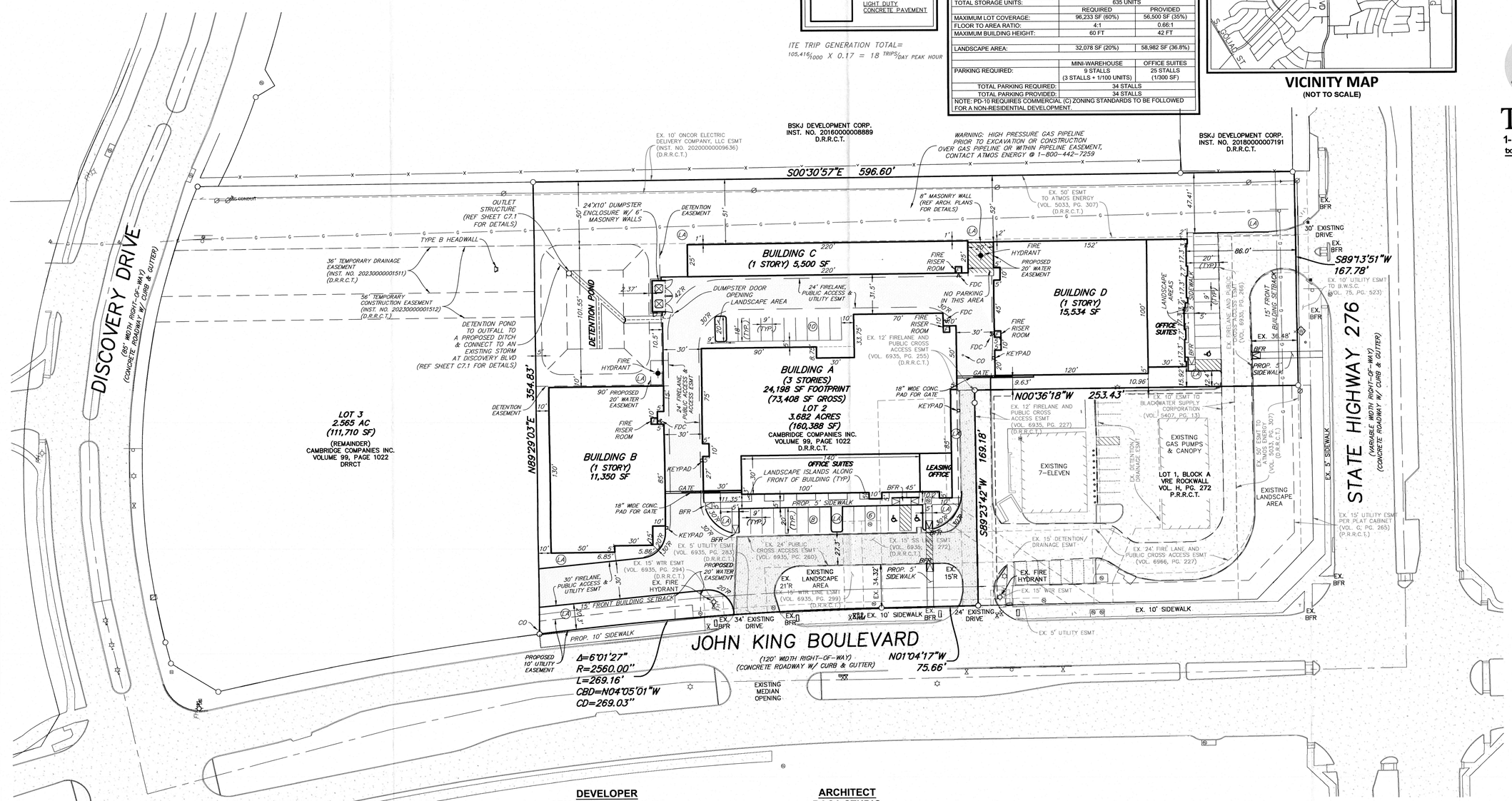

DEVELOPER
ADVANTAGE STORAGE
2221 LAKESIDE BOULEVARD, SUITE 1260
RICHARDSON, TEXAS 75082
CONTACT: RICK JONES
PHONE: (972) 547-0236

ARCHITECT
BACA STUDIO
100 N. TRAVIS STREET, SUITE 500A
SHERMAN, TEXAS 75090
CONTACT: DAVID BACA
PHONE: (903) 893-5800
EMAIL: DAVID@DAVIDBACASTUDIO.COM

ENGINEER
URBAN STRATEGY
1100 E CAMPBELL, SUITE 210
RICHARDSON, TX 75081
CONTACT: ROBERT L. PRUETT, P.E.
PHONE: (214) 295-5347
EMAIL: BOBP@URBANSTRATEGY.US

SURVEYOR
O'NEAL SURVEYING COMPANY
205 N. WINDCO CIRCLE, SUITE 100
WYLIE, TEXAS 75098
DANIEL C. O'NEAL
PHONE: (903) 804-2891
EMAIL: DANIEL.ONEAL@ONEALSURVEYING.COM

LANDSCAPE ARCHITECT
EVERGREEN DESIGN GROUP
15455 DALLAS PARKWAY, SUITE 600
ADDISON, TX 75001
DARCY BRANDON
PHONE: (800) 680-6630
EMAIL: DARCY@EVERGREENDESIGNGROUP.COM

APPROVED:
I HEREBY CERTIFY THAT THE ABOVE AND FOREGOING SITE PLAN FOR A DEVELOPMENT IN THE CITY OF ROCKWALL, TEXAS, WAS APPROVED BY THE PLANNING & ZONING COMMISSION OF THE CITY OF ROCKWALL ON THE 13th DAY OF September, 2022.

WITNESS OUR HANDS, THIS 15th DAY OF March, 2023.

PLANNING & ZONING COMMISSION, CHAIRMAN — *DIRECTOR OF PLANNING AND ZONING*

NO.	DATE	REVISION
		REV. BLDG A & C

TEL: 214.369.2339
www.urbanstrategy.us
URBAN STRATEGY
4222 Main Street
Dallas, Texas 75226
Firm Registration #F-22534

PRELIMINARY
NOT FOR CONSTRUCTION, BIDDING, OR PERMIT PURPOSE.
PREPARED UNDER THE SUPERVISION OF ROBERT L. PRUETT, JR. P.E.# 53662 ON 2/28/2023

ADVANTAGE STORAGE
STATE HIGHWAY 276
OUT OF THE JAMES M. ALLEN SURVEY, ABSTRACT NO. 2
CITY OF ROCKWALL, ROCKWALL COUNTY, TEXAS

AMENDED SITE PLAN

PROJECT:
PREPARED ON: 12/23/2022
CLIENT: ADVANTAGE STORAGE
DRAWN BY: LL
DESIGNER: LL
REVIEWER: BP
U.S. PROJECT: 22577
SHEET TITLE:
SHEET SP-1

FILE NAME: C-SITE.DWG
FILE LOCATION: G:\Drawing Files\Team Folders\Projects\2022\22577 Advantage Storage- John King US 276 Rockwall\CAD\Working Files\C-SITE.dwg
LAST MODIFIED BY: VICTOR ASEOVE
LAST MODIFIED ON: 2/28/2023 11:15 AM
PLOTTED ON: 2/28/2023 11:59 AM

CITY CASE NO. SP2022-044

EXTERIOR WALL FINISH MATERIALS		
BRICK	29%	1,743 SF
STUCCO	32%	1,936 SF
STONE	39%	2,413 SF
TOTAL	100%	6,092 SF

BUILDING TOTALS		
BRICK	51%	11,167 SF
STUCCO	25%	5,512 SF
STONE	24%	5,428 SF
TOTAL	100%	22,107 SF

4 BLDG A
WEST ELEVATION
SCALE: 3/32" = 1' 0"

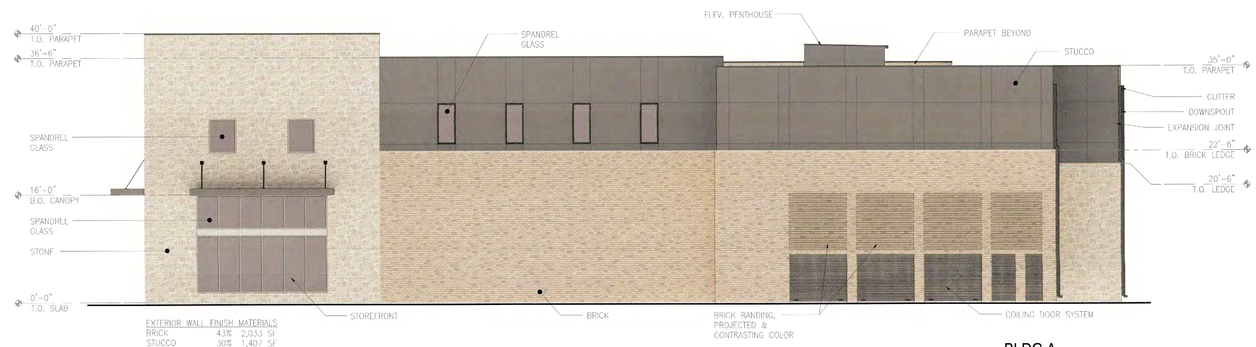

EXTERIOR WALL FINISH MATERIALS		
BRICK	43%	2,033 SF
STUCCO	30%	1,407 SF
STONE	27%	1,261 SF
TOTAL	100%	4,701 SF

3 BLDG A
SOUTH ELEVATION
SCALE: 3/32" = 1'-0"

EXTERIOR WALL FINISH MATERIALS		
BRICK	65%	4,163 SF
STUCCO	23%	1,469 SF
STONE	12%	773 SF
TOTAL	100%	6,425 SF

2 BLDG A
EAST ELEVATION
SCALE: 3/32" = 1'-0"

EXTERIOR WALL FINISH MATERIALS		
BRICK	67%	3,411 SF
STUCCO	14%	688 SF
STONE	19%	981 SF
TOTAL	100%	5,080 SF

1 BLDG A
NORTH ELEVATION
SCALE: 3/32" = 1' 0"

APPROVED:
I hereby certify that the above and foregoing site plan for development in the City of Rockwall, Texas, was approved by the Planning & Zoning Commission on the 19th day of September, 2022.

Planning & Zoning Commission, Chairman

Director of Planning & Zoning

BACA

100 NORTH TRAVIS STREET
SUITE NO.500
SHERMAN, TEXAS 75090

903.893.5800

www.BACA.team

DESIGN DEVELOPMENT REVIEW

NOT FOR REGULATORY APPROVAL, PERMITTING, OR CONSTRUCTION

REVISIONS

NO.	DESCRIPTION	DATE

exterior elevations - bldg a

Advantage Storage
New Storage Facility

1701 State Highway 276
Rockwall, Texas

PROJECT NUMBER
2225

DATE
01.11.23

SHEET NUMBER
A6.0

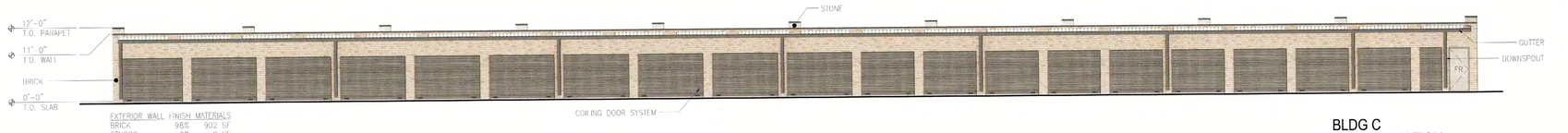

EXTERIOR WALL FINISH MATERIALS

BRICK	98%	902 SF
STUCCO	0%	0 SF
STONE	2%	17 SF
TOTAL	100%	919 SF

BUILDING TOTALS

BRICK	92%	3,504 SF
STUCCO	0%	0 SF
STONE	8%	306 SF
TOTAL	100%	3,810 SF

8 BLDG C
WEST ELEVATION
SCALE: 3/32" = 1'-0"

EXTERIOR WALL FINISH MATERIALS

BRICK	96%	282 SF
STUCCO	0%	0 SF
STONE	4%	13 SF
TOTAL	100%	295 SF

7 BLDG C
NORTH ELEVATION
SCALE: 3/32" = 1'-0"

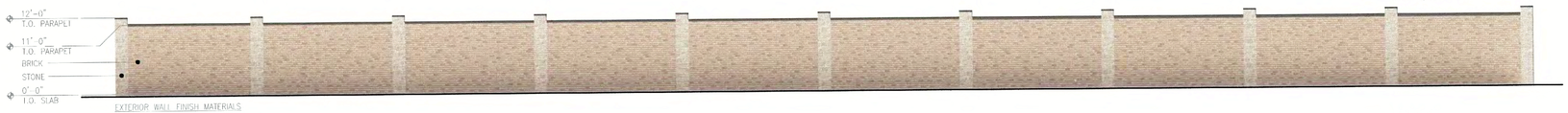

EXTERIOR WALL FINISH MATERIALS

BRICK	89%	2,174 SF
STUCCO	0%	0 SF
STONE	11%	264 SF
TOTAL	100%	2,438 SF

6 BLDG C
EAST ELEVATION
SCALE: 3/32" = 1'-0"

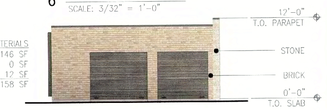

EXTERIOR WALL FINISH MATERIALS

BRICK	88%	146 SF
STUCCO	0%	0 SF
STONE	12%	12 SF
TOTAL	100%	158 SF

5 BLDG C
SOUTH ELEVATION
SCALE: 3/32" = 1'-0"

EXTERIOR WALL FINISH MATERIALS

BRICK	47%	515 SF
STUCCO	2%	18 SF
STONE	51%	552 SF
TOTAL	100%	1,085 SF

BUILDING TOTALS

BRICK	66%	4,573 SF
STUCCO	7%	471 SF
STONE	27%	1,843 SF
TOTAL	100%	6,887 SF

12 BLDG D
WEST ELEVATION
SCALE: 3/32" = 1'-0"

EXTERIOR WALL FINISH MATERIALS

BRICK	23%	297 SF
STUCCO	10%	132 SF
STONE	67%	861 SF
TOTAL	100%	1,290 SF

BUILDING TOTALS

BRICK	63%	3,479 SF
STUCCO	4%	205 SF
STONE	33%	1,832 SF
TOTAL	100%	5,516 SF

4 BLDG B
WEST ELEVATION
SCALE: 3/32" = 1'-0"

EXTERIOR WALL FINISH MATERIALS

BRICK	57%	1,352 SF
STUCCO	19%	450 SF
STONE	24%	562 SF
TOTAL	100%	2,364 SF

11 BLDG D
SOUTH ELEVATION
SCALE: 3/32" = 1'-0"

EXTERIOR WALL FINISH MATERIALS

BRICK	81%	1,418 SF
STUCCO	0%	1 SF
STONE	19%	315 SF
TOTAL	100%	1,734 SF

3 BLDG B
SOUTH ELEVATION
SCALE: 3/32" = 1'-0"

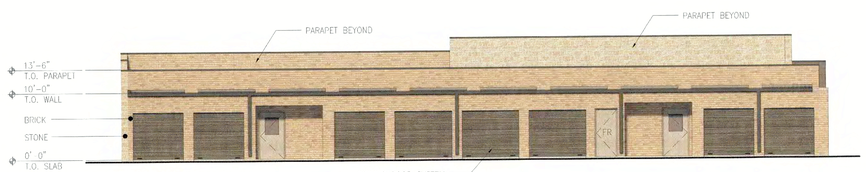

EXTERIOR WALL FINISH MATERIALS

BRICK	81%	1,047 SF
STUCCO	1%	4 SF
STONE	18%	234 SF
TOTAL	100%	1,285 SF

10 BLDG D
EAST ELEVATION
SCALE: 3/32" = 1'-0"

APPROVED:
I hereby certify that the above and foregoing site plan for development in the City of Rockwall, Texas, was approved by the Planning & Zoning Commission on the 13th day of Sept., 2022.

Planning & Zoning Commission, Chairman

Director of Planning & Zoning

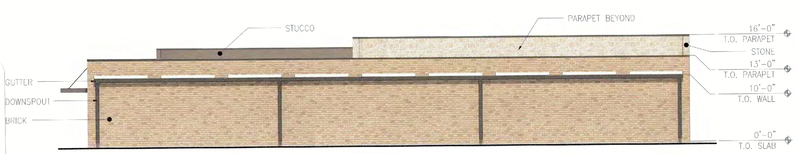

EXTERIOR WALL FINISH MATERIALS

BRICK	87%	1,115 SF
STUCCO	2%	37 SF
STONE	11%	136 SF
TOTAL	100%	1,288 SF

2 BLDG B
EAST ELEVATION
SCALE: 3/32" = 1'-0"

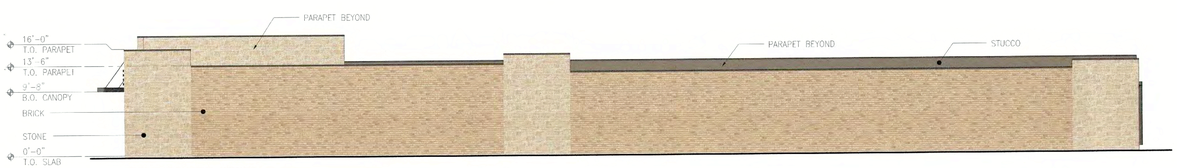

EXTERIOR WALL FINISH MATERIALS

BRICK	74%	1,659 SF
STUCCO	0%	0 SF
STONE	26%	572 SF
TOTAL	100%	2,231 SF

9 BLDG D
NORTH ELEVATION
SCALE: 3/32" = 1'-0"

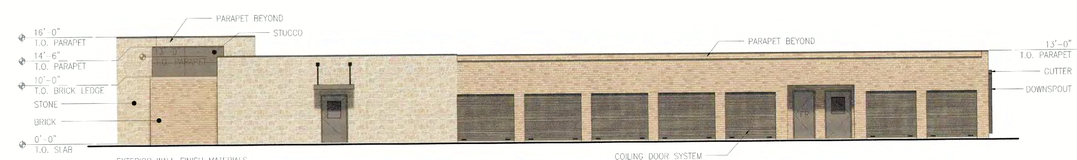

EXTERIOR WALL FINISH MATERIALS

BRICK	53%	658 SF
STUCCO	3%	42 SF
STONE	44%	533 SF
TOTAL	100%	1,232 SF

1 BLDG B
NORTH ELEVATION
SCALE: 3/32" = 1'-0"

exterior elevations - bldg's b, c, & d

BACA

100 NORTH TRAVIS STREET
SUITE NO.500
SHERMAN, TEXAS 75090

903.893.5800

www.BACA.team

DESIGN DEVELOPMENT REVIEW

NOT FOR REGULATORY APPROVAL, PERMITTING, OR CONSTRUCTION

REVISIONS

NO.	DESCRIPTION	DATE

Advantage Storage
New Storage Facility

1701 State Highway 276
Rockwall, Texas

PROJECT NUMBER
2225

DATE
01.11.23

SHEET NUMBER
A6.1

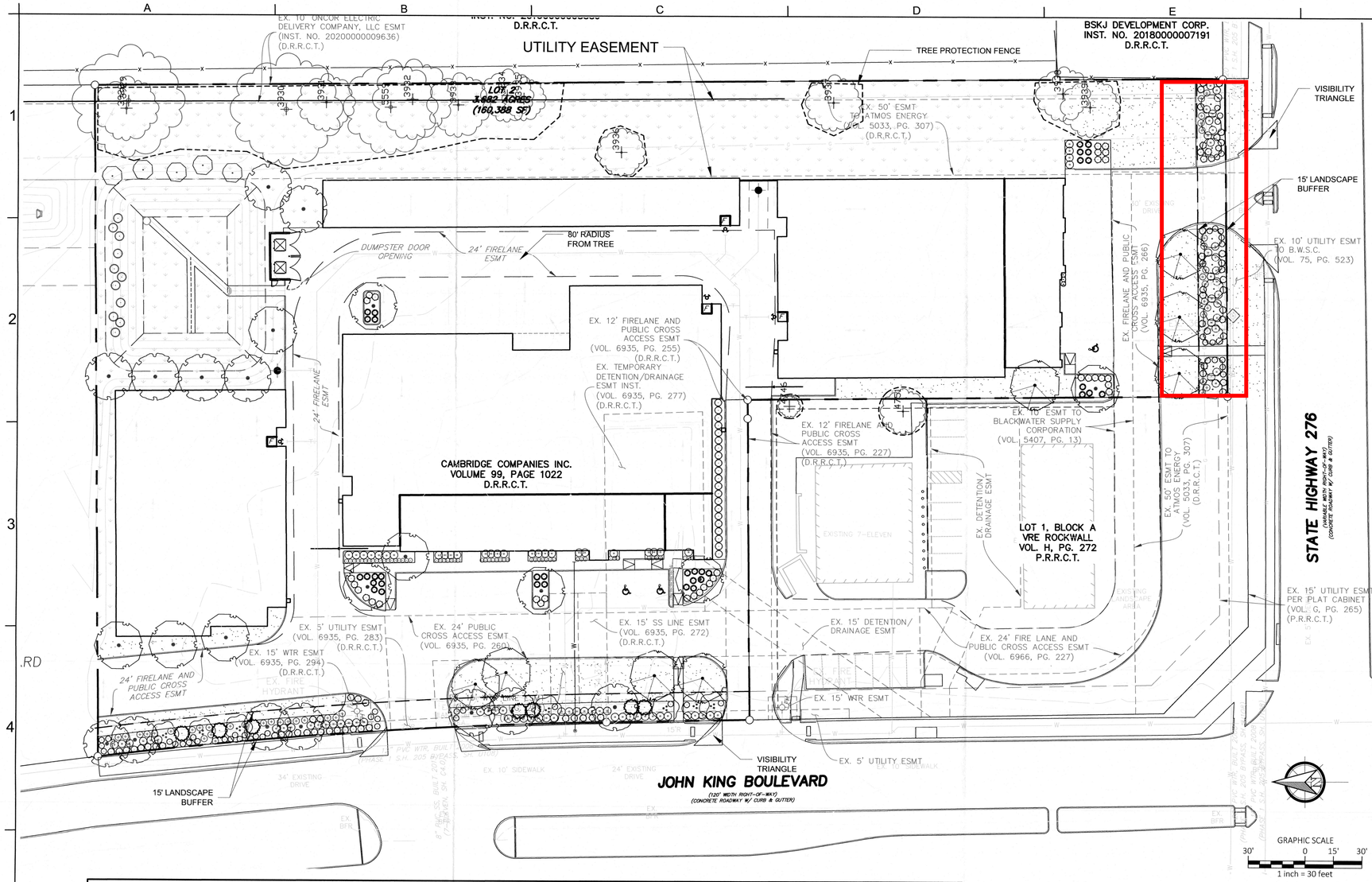

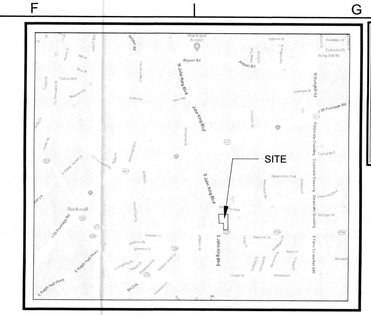

VICINITY MAP
(NOT TO SCALE)

EVERGREEN DESIGN GROUP
(800) 680-6630
15455 Dallas Pkwy., Ste 600
Addison, TX 75001
www.EvergreenDesignGroup.com

PLANT SCHEDULE

CANOPY TREES	QTY	BOTANICAL / COMMON NAME	CAL	SIZE
	8	ACER RUBRUM 'OCTOBER GLORY' OCTOBER GLORY MAPLE	4" CAL*	14'-16' HT
	13	QUERCUS MUHLENBERGIA CHINQUAPIN OAK	4" CAL*	14'-16' HT
	10	ULMUS CRASSIFOLIA CEDAR ELM	4" CAL*	16'-18' HT

*ALL CANOPY TREES TO BE USED FOR MITIGATION

ACCENT TREES	QTY	BOTANICAL / COMMON NAME	CAL	SIZE
	7	CERCIS CANADENSIS EASTERN REDBUD 3-5 STEMS	3" CAL. 1" / STEM	4`-6`- HT
	7	ILEX DECIDUA POSSUM HAW 3-5 STEMS	3" CAL. 1" / STEM	4`-6`- HT

LARGE SHRUBS	QTY	BOTANICAL / COMMON NAME	CONT
	15	RHUS VIRENS V. VIRENS EVERGREEN SUMAC	10 GAL 4'-6' HT

MEDIUM SHRUBS	QTY	BOTANICAL / COMMON NAME	CONT
	105	ILEX CORNUTA 'BURFORDII NANA' DWARF BURFORD HOLLY	5 GAL
	39	LOROPETALUM CHINENSE 'PURPLE DAYDREAM' DWARF FRINGEFLOWER	5 GAL.

SMALL SHRUBS	QTY	BOTANICAL / COMMON NAME	CONT
	49	BERBERIS THUN. 'CRIMSON PYGMY' CRIMSON PYGMY BARBERRY	5 GAL.
	34	HESPERALOE PARVIFLORA RED YUCCA	3 GAL
	95	LANTANA X `NEW GOLD` NEW GOLD LANTANA	5 GAL

ORNAMENTAL GRASSES	QTY	BOTANICAL / COMMON NAME	CONT
	32	MUHLENBERGIA RIGENS DEER GRASS	5 GAL

GROUND COVER	QTY	BOTANICAL / COMMON NAME	CONT
	53	RUELLIA BRITTONIANA 'KATIE' KATIE'S DWARF PETUNIA	3 GAL
	13,325 SF	CYNODON 'TIFWAY 419' TIFWAY 419 BERMUDA GRASS	SOD
	38,885 SF	BLACKLAND PRAIRIE SEED MIX NATIVE AMERICAN SEED (SEEDSOURCE.COM)	HYDROSEED

LANDSCAPE STANDARDS

05.01 LANDSCAPE BUFFERS - NON-RESIDENTIAL	
REQ. ABUTTING A PUBLIC RIGHT-OF-WAY:	15' WIDE BUFFER REQ. W/ 2 CANOPY + 4 ACCENT TREE PER 100 LIN. FT. OF FRONTAGE; GROUND COVER, BUILT-UP BERM AND SHRUBBERY ALONG ENTIRE FRONTAGE, 30" HIGH, MIN.- 48" MAX. HT.
JOHN KING BLVD.: REQUIRED PLANTING: PROVIDED 15' BUFFER:	±344.8' STREET FRONTAGE 7 CANOPY TREES, 14 ACCENT TREES, BERM W/ SHRUBS 7 NEW CANOPY TREES, 14 ACCENT TREES W/ BERM AND SHRUBS (30" HIGH MIN.)
ST. HWY. 276 OVERLAY DISTRICT: ±167.8 STREET FRONTAGE	15' WIDE LANDSCAPE BUFFER W/ GR. COVER, BUILT-UP BERM & SHRUBS (30" MIN.-48" MAX) ALONG ENTIRE LENGTH OF FRONTAGE. 2 CANOPY TREES + 4 ACCENT TREES PER 100 LIN. FEET OF FRONTAGE
REQUIRED PLANTING: PROVIDED 15' BUFFER:	3 CANOPY TREES, 7 ACCENT TREES, BERM W/ SHRUBS UNABLE TO PROVIDE REQ. TREES DUE TO EASEMENTS & UNDERGROUND UTILITIES (WATER, STORM, SANITARY) REPLACE TREES W/ 10 LG. SHRUBS, BERM WITH SHRUBS (30" HI MIN.-48" MAX.)
EAST PROPERTY LINE BUFFER:	NOT REQUIRED. PROPERTY ZONED PD-10
NORTH PROPERTY LINE BUFFER:	NOT REQUIRED. PROPERTY ZONED LIGHT INDUSTRIAL
05.02 LANDSCAPE SCREENING	
REQ. HEADLIGHT SCREENING	NOT APPLICABLE
SCREENING FROM RESIDENTIAL	NOT APPLICABLE

05.03 LANDSCAPE REQUIREMENTS - COMMERCIAL (C) DISTRICT	
TOTAL SITE AREA:	±160,353 SF
LANDSCAPE AREA REQUIRED TOTAL SITE:	32,071 SF (20%)
LANDSCAPE PROVIDED, TOTAL SITE:	±58,742 SF (36.6%)
LOCATION OF LANDSCAPING:	MIN. 50% OF REQ. LANDSCAPING SHALL BE LOCATED IN THE FRONT OF & ALONG THE SIDE OF BUILDINGS W/ STREET FRONTAGE.
LANDSCAPE AREAS IN FRONT & SIDES OF BUILDINGS:	±40,718 SF (69%)
MIN. SIZE OF AREAS:	ALL REQ. LANDSCAPING SHALL BE NO LESS THAN 5' WIDE AND A MIN. OF 25 SF IN AREA
DETENTION BASIN (XERISCAPE OPTION):	MIN. (1) SHRUB/ORNAMENTAL GRASS PER 750 SF OF DRY LAND AREA
PROPOSED DETENTION BASIN LANDSCAPING:	5,649 / 750 = 8 SHRUBS + NATIVE GRASSES
PARKING LOT LANDSCAPING	MIN. 5% OR 200 SF OF LANDSCAPING, WHICHEVER IS GREATER, IN THE INTERIOR OF PARKING LOT AREA.
PROPOSED PARKING AREA:	±29,004 SF
REQ. PARKING LOT LANDSCAPING:	±1,450 SF (29,004 x 5%) AND (1) LG. CANOPY TREE FOR EVERY 10 PARKING SPACES INTERNAL TO PARKING AREAS (PARKING AREA OVER 20,000 SF) REQ. PARKING SPACES MUST BE WITHIN 80' OF A CANOPY TREE TRUNK
PROPOSED PARKING LOT LANDSCAPING:	±1,528 SF (5%)
	34 PARKING SPACES / 10 = 3 TREES
TREES PROVIDED:	5 CANOPY TREES

MULCHES

AFTER ALL PLANTING IS COMPLETE, CONTRACTOR SHALL INSTALL 3" THICK LAYER OF 1-1/2" SHREDDED WOOD MULCH, NATURAL (UNDYED). IN ALL PLANTING AREAS (EXCEPT FOR TURF AND SEEDED AREAS). CONTRACTOR SHALL SUBMIT SAMPLES OF ALL MULCHES TO LANDSCAPE ARCHITECT AND OWNER FOR APPROVAL PRIOR TO CONSTRUCTION. ABSOLUTELY NO EXPOSED GROUND SHALL BE LEFT SHOWING ANYWHERE ON THE PROJECT AFTER MULCH HAS BEEN INSTALLED (SUBJECT TO THE CONDITIONS AND REQUIREMENTS OF THE "GENERAL GRADING AND PLANTING NOTES" AND SPECIFICATIONS).

ROOT BARRIERS

THE CONTRACTOR SHALL INSTALL ROOT BARRIERS NEAR ALL NEWLY-PLANTED TREES THAT ARE LOCATED WITHIN FIVE (5) FEET OF PAVING OR CURBS. ROOT BARRIERS SHALL BE "CENTURY" OR "DEEP-ROOT" 24" DEEP PANELS (OR EQUAL). BARRIERS SHALL BE LOCATED IMMEDIATELY ADJACENT TO HARDSCAPE. INSTALL PANELS PER MANUFACTURER'S RECOMMENDATIONS. UNDER NO CIRCUMSTANCES SHALL THE CONTRACTOR USE ROOT BARRIERS OF A TYPE THAT COMPLETELY ENCIRCLE THE ROOTBALL.

UTILITY SCREENING NOTE:
GROUND MOUNTED EQUIPMENT AND AIR CONDITIONING UNITS SHALL BE SCREENED UTILIZING PLANTINGS, BERMS, WALLS MATCHING THE MAIN STRUCTURE, OR AN ARCHITECTURAL FEATURE THAT IS INTEGRAL TO THE BUILDING'S DESIGN.

TREE MITIGATION SUMMARY

TOTAL MITIGATION REQUIRED:	119.75"
MITIGATION PROVIDED BY PLANTING 4" CALIPER TREES (31) TO BE PLANTED ONSITE:	124.0"
MITIGATION PROVIDED BY PURCHASING PRESERVATION CREDITS (20% OF TOTAL):	0"
TOTAL MITIGATION PROVIDED:	124.0"

CONTACT 811 BEFORE YOU DIG 811 SAFE DIGGING PARTNER

APPROVED:
I HEREBY CERTIFY THAT THE ABOVE AND FOREGOING SITE PLAN FOR A DEVELOPMENT IN THE CITY OF ROCKWALL, TEXAS, WAS APPROVED BY THE PLANNING & ZONING COMMISSION OF THE CITY OF ROCKWALL ON THE 13th DAY OF September 2022

WITNESS OUR HANDS, THIS 15th DAY OF March, 2023

PLANNING & ZONING COMMISSION, CHAIRMAN

DIRECTOR OF PLANNING AND ZONING

SITE DATA TABLE

EXISTING USE:	VACANT	
PROPOSED USE:	MINI-WAREHOUSE & OFFICE SUITES	
EXISTING ZONING DISTRICT:	PLANNED DEVELOPMENT (PD-10)	
SITE AREA (LOT 2):	3.682 AC (160,388 SF)	
SITE AREA (LOT 3):	2.565 AC (111,719 SF)	
TOTAL SITE AREA:	6.247 AC (272,107 SF)	
FOR LOT 2 ONLY		
BUILDING AREA	MINI-WAREHOUSE	OFFICE SUITES
BUILDING A (3 STORIES):	69,250 SF	4,400 SF
BUILDING B (1 STORY):	11,350 SF	0 SF
BUILDING C (1 STORY):	4,000 SF	0 SF
BUILDING D (1 STORY):	13,100 SF	3,000 SF
TOTAL BUILDING AREA:	105,100 SF	
TOTAL BUILDING FOOTPRINT AREA:	56,000 SF	
TOTAL STORAGE UNITS:	635 UNITS	
	REQUIRED	PROVIDED
MAXIMUM LOT COVERAGE:	96,233 SF (60%)	56,000 SF (35%)
FLOOR TO AREA RATIO:	4:1	0.66:1
MAXIMUM BUILDING HEIGHT:	60 FT	42 FT
LANDSCAPE AREA:	32,078 SF (20%)	58,982 SF (36.8%)
	MINI-WAREHOUSE	OFFICE SUITES
PARKING REQUIRED:	9 STALLS (3 STALLS + 1/100 UNITS)	25 STALLS (1/300 SF)
TOTAL PARKING REQUIRED:	34 STALLS	
TOTAL PARKING PROVIDED:	34 STALLS	

NOTE: PD-10 REQUIRES COMMERCIAL (C) ZONING STANDARDS TO BE FOLLOWED FOR A NON-RESIDENTIAL DEVELOPMENT.

NO.	DATE	REVISION

TEL: 214-295-5775
www.urbanstruct.com
URBAN STRUCTURE
8140 Walnut Hill Lane, Suite 905
Dallas, Texas 75231
Firm Registration #F-22323

REGISTERED LANDSCAPE ARCHITECT
LANCE R. BRANDON
3423
STATE OF TEXAS
01/31/2023

ADVANTAGE STORAGE
1701 STATE HIGHWAY 276
OUT OF THE JAMES M. ALLEN SURVEY, ABSTRACT NO. 2
CITY OF ROCKWALL, ROCKWALL COUNTY, TEXAS

LANDSCAPE PLANTING PLAN

PROJECT:

SHEET TITLE:

PREPARED ON: 07/14/2022
CLIENT: ADVANTAGE STORAGE
DRAWN BY: LL
DESIGNER: LL
REVIEWER: BP
U.S. PROJECT: 22577

SHEET
LP-1

CITY CASE NO. ######

PLANTING SPECIFICATIONS

GENERAL

A. QUALIFICATIONS OF LANDSCAPE CONTRACTOR
1. ALL LANDSCAPE WORK SHOWN ON THESE PLANS SHALL BE PERFORMED BY A SINGLE FIRM SPECIALIZING IN LANDSCAPE PLANTING.
2. A LIST OF SUCCESSFULLY COMPLETED PROJECTS OF THIS TYPE, SIZE AND NATURE MAY BE REQUESTED BY THE OWNER FOR FURTHER QUALIFICATION MEASURES.
3. THE LANDSCAPE CONTRACTOR SHALL HOLD A VALID NURSERY AND FLORAL CERTIFICATE ISSUED BY THE TEXAS DEPARTMENT OF AGRICULTURE, AS WELL AS OPERATE UNDER A COMMERCIAL PESTICIDE APPLICATOR LICENSE ISSUED BY EITHER THE TEXAS DEPARTMENT OF AGRICULTURE OR THE TEXAS STRUCTURAL PEST CONTROL BOARD.

B. SCOPE OF WORK
1. WORK COVERED BY THESE SECTIONS INCLUDES THE FURNISHING AND PAYMENT OF ALL MATERIALS, LABOR, SERVICES, EQUIPMENT, LICENSES, TAXES AND ANY OTHER ITEMS THAT ARE NECESSARY FOR THE EXECUTION, INSTALLATION AND COMPLETION OF ALL WORK, SPECIFIED HEREIN AND / OR SHOWN ON THE LANDSCAPE PLANS, NOTES, AND DETAILS.
2. ALL WORK SHALL BE PERFORMED IN ACCORDANCE WITH ALL APPLICABLE LAWS, CODES AND REGULATIONS REQUIRED BY AUTHORITIES HAVING JURISDICTION OVER SUCH WORK, INCLUDING ALL INSPECTIONS AND PERMITS REQUIRED BY FEDERAL, STATE AND LOCAL AUTHORITIES IN SUPPLY, TRANSPORTATION AND INSTALLATION OF MATERIALS.
3. THE LANDSCAPE CONTRACTOR SHALL VERIFY THE LOCATION OF ALL UNDERGROUND UTILITY LINES (WATER, SEWER, ELECTRICAL, TELEPHONE, GAS, CABLE, TELEVISION, ETC.) PRIOR TO THE START OF ANY WORK.

PRODUCTS

A. ALL MANUFACTURED PRODUCTS SHALL BE NEW.
B. CONTAINER AND BALLED-AND-BURLAPPED PLANTS:
1. FURNISH NURSERY-GROWN PLANTS COMPLYING WITH ANSI Z60.1-2014. PROVIDE WELL-SHAPED, FULLY BRANCHED, HEALTHY, VIGOROUS STOCK FREE OF DISEASE, INSECTS, EGGS, LARVAE, AND DEFECTS SUCH AS KNOTS, SUN SCALD, INJURIES, ABRASIONS, AND DISFIGUREMENT. ALL PLANTS WITHIN A SPECIES SHALL HAVE SIMILAR SIZE, AND SHALL BE OF A FORM TYPICAL FOR THE SPECIES. ALL TREES SHALL BE OBTAINED FROM SOURCES WITHIN 200 MILES OF THE PROJECT SITE, AND WITH SIMILAR CLIMACTIC CONDITIONS.
2. ROOT SYSTEMS SHALL BE HEALTHY, DENSELY BRANCHED ROOT SYSTEMS, NON-POT-BOUND, FREE FROM ENCIRCLING AND/OR GIRDLING ROOTS, AND FREE FROM ANY OTHER ROOT DEFECTS (SUCH AS J-SHAPED ROOTS).
3. TREES MAY BE PLANTED FROM CONTAINERS OR BALLED-AND-BURLAPPED (B&B), UNLESS SPECIFIED ON THE PLANTING LEGEND. BARE-ROOT TREES ARE NOT ACCEPTABLE.
4. ANY PLANT DEEMED UNACCEPTABLE BY THE LANDSCAPE ARCHITECT OR OWNER SHALL BE IMMEDIATELY REMOVED FROM THE SITE AND SHALL BE REPLACED WITH AN ACCEPTBLE PLANT OF LIKE TYPE AND SIZE AT THE CONTRACTOR'S OWN EXPENSE. ANY PLANTS APPEARING TO BE UNHEALTHY, EVEN IF DETERMINED TO STILL BE ALIVE, SHALL NOT BE ACCEPTED. THE LANDSCAPE ARCHITECT AND OWNER SHALL BE THE SOLE JUDGES AS TO THE ACCEPTABILITY OF PLANT MATERIAL.
5. ALL TREES SHALL BE STANDARD IN FORM, UNLESS OTHERWISE SPECIFIED. TREES WITH CENTRAL LEADERS WILL NOT BE ACCEPTED IF LEADER IS DAMAGED OR REMOVED. PRUNE ALL DAMAGED TWIGS AFTER PLANTING.
6. CALIPER MEASUREMENTS FOR STANDARD (SINGLE TRUNK) TREES SHALL BE AS FOLLOWS: SIX INCHES ABOVE THE ROOT FLARE FOR TREES UP TO AND INCLUDING FOUR INCHES IN CALIPER, AND TWELVE INCHES ABOVE THE ROOT FLARE FOR TREES EXCEEDING FOUR INCHES IN CALIPER.
7. MULTI-TRUNK TREES SHALL BE MEASURED BY THEIR OVERALL HEIGHT, MEASURED FROM THE TOP OF THE ROOT BALL. WHERE CALIPER MEASUREMENTS ARE USED, THE CALIPER SHALL BE CALCULATED AS ONE-HALF OF THE SUM OF THE CALIPER OF THE THREE LARGEST TRUNKS.
8. ANY TREE OR SHRUB SHOWN TO HAVE EXCESS SOIL PLACED ON TOP OF THE ROOT BALL, SO THAT THE ROOT FLARE HAS BEEN COMPLETELY COVERED, SHALL BE REJECTED.

C. SOD: PROVIDE WELL-ROOTED SOD OF THE VARIETY NOTED ON THE PLANS. SOD SHALL BE CUT FROM HEALTHY, MATURE TURF WITH SOIL THICKNESS OF 3/4" TO 1". EACH PALLET OF SOD SHALL BE ACCOMPANIED BY A CERTIFICATE FROM SUPPLIER STATING THE COMPOSITION OF THE SOD.
D. TOPSOIL: SANDY TO CLAY LOAM TOPSOIL, FREE OF STONES LARGER THAN ½ INCH, FOREIGN MATTER, PLANTS, ROOTS, AND SEEDS.
E. COMPOST: WELL-COMPOSTED, STABLE, AND WEED-FREE ORGANIC MATTER, pH RANGE OF 5.5 TO 8; MOISTURE CONTENT 35 TO 55 PERCENT BY WEIGHT; 100 PERCENT PASSING THROUGH 3/4-INCH SIEVE; SOLUBLE SALT CONTENT OF 5 TO 10 DECISIEMENS/M; NOT EXCEEDING 0.5 PERCENT INERT CONTAMINANTS AND FREE OF SUBSTANCES TOXIC TO PLANTINGS. NO MANURE OR ANIMAL-BASED PRODUCTS SHALL BE USED.
F. FERTILIZER: GRANULAR FERTILIZER CONSISTING OF NITROGEN, PHOSPHORUS, POTASSIUM, AND OTHER NUTRIENTS IN PROPORTIONS, AMOUNTS, AND RELEASE RATES RECOMMENDED IN A SOIL REPORT FROM A QUALIFIED SOIL-TESTING AGENCY (SEE BELOW).
G. MULCH: SIZE AND TYPE AS INDICATED ON PLANS, FREE FROM DELETERIOUS MATERIALS AND SUITABLE AS A TOP DRESSING OF TREES AND SHRUBS.
H. TREE STAKING AND GUYING
1. STAKES: 6' LONG GREEN METAL T-POSTS.
2. GUY AND TIE WIRE: ASTM A 641, CLASS 1, GALVANIZED-STEEL WIRE, 2-STRAND, TWISTED, 0.106 INCH DIAMETER.
3. STRAP CHAFING GUARD: REINFORCED NYLON OR CANVAS AT LEAST 1-1/2 INCH WIDE, WITH GROMMETS TO PROTECT TREE TRUNKS FROM DAMAGE.

I. STEEL EDGING: PROFESSIONAL STEEL EDGING, 14 GAUGE THICK X 4 INCHES WIDE, FACTORY PAINTED DARK GREEN. ACCEPTABLE MANUFACTURERS INCLUDE COL-MET OR APPROVED EQUAL.
J. PRE-EMERGENT HERBICIDES: ANY GRANULAR, NON-STAINING PRE-EMERGENT HERBICIDE THAT IS LABELED FOR THE SPECIFIC ORNAMENTALS OR TURF ON WHICH IT WILL BE UTILIZED. PRE-EMERGENT HERBICIDES SHALL BE APPLIED PER THE MANUFACTURER'S LABELED RATES.

METHODS

A. SOIL PREPARATION
1. BEFORE STARTING WORK, THE LANDSCAPE CONTRACTOR SHALL VERIFY THAT THE GRADE OF ALL LANDSCAPE AREAS ARE WITHIN +/-0.1' OF FINISH GRADE. THE CONTRACTOR SHALL NOTIFY THE OWNER IMMEDIATELY SHOULD ANY DISCREPANCIES EXIST.
2. SOIL TESTING:
   a. AFTER FINISH GRADES HAVE BEEN ESTABLISHED, CONTRACTOR SHALL HAVE SOIL SAMPLES FROM THE PROJECT'S LANDSCAPE AREAS TESTED BY AN ESTABLISHED SOIL TESTING LABORATORY. EACH SAMPLE SUBMITTED TO THE LAB SHALL CONTAIN NO LESS THAN ONE QUART OF SOIL, TAKEN FROM BETWEEN THE SOIL SURFACE AND 6" DEPTH. IF NO SAMPLE LOCATIONS ARE INDICATED ON THE PLANS, THE CONTRACTOR SHALL TAKE A MINIMUM OF THREE SAMPLES FROM VARIOUS REPRESENTATIVE LOCATIONS FOR TESTING.
   b. THE CONTRACTOR SHALL HAVE THE SOIL TESTING LABORATORY PROVIDE RESULTS FOR THE FOLLOWING: SOIL TEXTURAL CLASS, GENERAL SOIL FERTILITY, pH, ORGANIC MATTER CONTENT, SALT (CEC), LIME, SODIUM ADSORPTION RATIO (SAR) AND BORON CONTENT.
   c. THE CONTRACTOR SHALL ALSO SUBMIT THE PROJECT'S PLANT LIST TO THE LABORATORY ALONG WITH THE SOIL SAMPLES.
   d. THE SOIL REPORT PRODUCED BY THE LABORATORY SHALL CONTAIN RECOMMENDATIONS FOR THE FOLLOWING (AS APPROPRIATE): SEPARATE SOIL PREPARATION AND BACKFILL MIX RECOMMENDATIONS FOR GENERAL ORNAMENTAL PLANTS, XERIC PLANTS, TURF, AND NATIVE SEED, AS WELL AS PRE-PLANT FERTILIZER APPLICATIONS AND RECOMMENDATIONS FOR ANY OTHER SOIL RELATED ISSUES. THE REPORT SHALL ALSO PROVIDE A FERTILIZER PROGRAM FOR THE ESTABLISHMENT PERIOD AND FOR LONG-TERM MAINTENANCE.
3. THE CONTRACTOR SHALL INSTALL SOIL AMENDMENTS AND FERTILIZERS PER THE SOILS REPORT RECOMMENDATIONS. ANY CHANGE IN COST DUE TO THE SOIL REPORT RECOMMENDATIONS, EITHER INCREASE OR DECREASE, SHALL BE SUBMITTED TO THE OWNER WITH THE REPORT.
4. FOR BIDDING PURPOSES ONLY, THE SOIL PREPARATION SHALL CONSIST OF THE FOLLOWING:
   a. TURF: INCORPORATE THE FOLLOWING AMENDMENTS INTO THE TOP 8" OF SOIL BY MEANS OF ROTOTILLING AFTER CROSS-RIPPING:
   i. NITROGEN STABILIZED ORGANIC AMENDMENT - 4 CU. YDS. PER 1,000 S.F.
   ii. PREPLANT TURF FERTILIZER (10-20-10 OR SIMILAR, SLOW RELEASE, ORGANIC) - 15 LBS PER 1,000 S.F.
   iii. "CLAY BUSTER" OR EQUAL - USE MANUFACTURER'S RECOMMENDED RATE
   b. TREES, SHRUBS, AND PERENNIALS: INCORPORATE THE FOLLOWING AMENDMENTS INTO THE TOP 8" OF SOIL BY MEANS OF ROTOTILLING AFTER CROSS-RIPPING:
   i. NITROGEN STABILIZED ORGANIC AMENDMENT - 4 CU. YDS. PER 1,000 S.F.
   ii. 12-12-12 FERTILIZER (OR SIMILAR, ORGANIC, SLOW RELEASE) - 10 LBS. PER CU. YD.
   iii. "CLAY BUSTER" OR EQUAL - USE MANUFACTURER'S RECOMMENDED RATE
   iv. IRON SULPHATE - 2 LBS. PER CU. YD.
5. IN THE CONTEXT OF THESE PLANS, NOTES, AND SPECIFICATIONS, "FINISH GRADE" REFERS TO THE FINAL ELEVATION OF THE SOIL SURFACE (NOT TOP OF MULCH) AS INDICATED ON THE GRADING PLANS.
   a. BEFORE STARTING WORK, THE LANDSCAPE CONTRACTOR SHALL VERIFY THAT THE ROUGH GRADES OF ALL LANDSCAPE AREAS ARE WITHIN +/-0.1' OF FINISH GRADE. SEE SPECIFICATIONS FOR MORE DETAILED INSTRUCTION ON TURF AREA AND PLANTING BED PREPARATION.
   b. CONSTRUCT AND MAINTAIN FINISH GRADES AS SHOWN ON GRADING PLANS, AND CONSTRUCT AND MAINTAIN SLOPES AS RECOMMENDED BY THE GEOTECHNICAL REPORT. ALL LANDSCAPE AREAS SHALL HAVE POSITIVE DRAINAGE AWAY FROM STRUCTURES AT THE MINIMUM SLOPE SPECIFIED IN THE REPORT AND ON THE GRADING PLANS, AND AREAS OF POTENTIAL PONDING SHALL BE REGRADED TO BLEND IN WITH THE SURROUNDING GRADES AND ELIMINATE PONDING POTENTIAL.
   c. THE LANDSCAPE CONTRACTOR SHALL DETERMINE WHETHER OR NOT THE EXPORT OF ANY SOIL WILL BE NEEDED, TAKING INTO ACCOUNT THE ROUGH GRADE PROVIDED, THE AMOUNT OF SOIL AMENDMENTS TO BE ADDED (**BASED ON A SOIL TEST**, PER SPECIFICATIONS), AND THE FINISH GRADES TO BE ESTABLISHED.
   d. ENSURE THAT THE FINISH GRADE IN SHRUB AREAS IMMEDIATELY ADJACENT TO WALKS AND OTHER WALKING SURFACES, AFTER INSTALLING SOIL AMENDMENTS, IS 3" BELOW THE ADJACENT FINISH SURFACE, IN ORDER TO ALLOW FOR PROPER MULCH DEPTH. TAPER THE SOIL SURFACE TO MEET FINISH GRADE, AS SPECIFIED ON THE GRADING PLANS, AT APPROXIMATELY 18" AWAY FROM THE WALKS.
   e. ENSURE THAT THE FINISH GRADE IN TURF AREAS IMMEDIATELY ADJACENT TO WALKS AND OTHER WALKING SURFACES, AFTER INSTALLING SOIL AMENDMENTS, IS 1" BELOW THE FINISH SURFACE OF THE WALKS. TAPER THE SOIL SURFACE TO MEET FINISH GRADE, AS SPECIFIED ON THE GRADING PLANS, AT APPROXIMATELY 18" AWAY FROM THE WALKS.
   f. SHOULD ANY CONFLICTS AND/OR DISCREPANCIES ARISE BETWEEN THE GRADING PLANS, GEOTECHNICAL REPORT, THESE NOTES AND PLANS, AND ACTUAL CONDITIONS, THE CONTRACTOR SHALL IMMEDIATELY BRING SUCH ITEMS TO THE ATTENTION OF THE LANDSCAPE ARCHITECT, GENERAL CONTRACTOR, AND OWNER.
6. ONCE SOIL PREPARATION IS COMPLETE, THE LANDSCAPE CONTRACTOR SHALL ENSURE THAT THERE ARE NO DEBRIS, TRASH, OR STONES LARGER THAN 1" REMAINING IN THE TOP 6" OF SOIL.

B. SUBMITTALS
1. THE CONTRACTOR SHALL PROVIDE SUBMITTALS AND SAMPLES, IF REQUIRED, TO THE LANDSCAPE ARCHITECT, AND RECEIVE APPROVAL IN WRITING FOR SUCH SUBMITTALS BEFORE WORK COMMENCES.
2. SUBMITTALS SHALL INCLUDE PHOTOS OF PLANTS WITH A RULER OR MEASURING STICK FOR SCALE, PHOTOS OR SAMPLES OF ANY REQUIRED MULCHES, AND SOIL TEST RESULTS AND PREPARATION RECOMMENDATIONS FROM THE TESTING LAB (INCLUDING COMPOST AND FERTILIZER RATES AND TYPES, AND OTHER AMENDMENTS FOR TREE/SHRUB, TURF, AND SEED AREAS AS MAY BE APPROPRIATE).
3. SUBMITTALS SHALL ALSO INCLUDE MANUFACTURER CUT SHEETS FOR PLANTING ACCESSORIES SUCH AS TREE STAKES AND TIES, EDGING, AND LANDSCAPE FABRICS (IF ANY).
4. WHERE MULTIPLE ITEMS ARE SHOWN ON A PAGE, THE CONTRACTOR SHALL CLEARLY INDICATE THE ITEM BEING CONSIDERED.

C. GENERAL PLANTING
1. REMOVE ALL NURSERY TAGS AND STAKES FROM PLANTS.
2. EXCEPT IN AREAS TO BE PLANTED WITH ORNAMENTAL GRASSES, APPLY PRE-EMERGENT HERBICIDES AT THE MANUFACTURER'S RECOMMENDED RATE.
3. TRENCHING NEAR EXISTING TREES:
   a. CONTRACTOR SHALL NOT DISTURB ROOTS 1-1/2" AND LARGER IN DIAMETER WITHIN THE CRITICAL ROOT ZONE (CRZ) OF EXISTING TREES, AND SHALL EXERCISE ALL POSSIBLE CARE AND PRECAUTIONS TO AVOID INJURY TO TREE ROOTS, TRUNKS, AND BRANCHES. THE CRZ IS DEFINED AS A CIRCULAR AREA EXTENDING OUTWARD FROM THE TREE TRUNK, WITH A RADIUS EQUAL TO 1' FOR EVERY 1" OF TRUNK DIAMETER-AT-BREAST-HEIGHT (4.5' ABOVE THE AVERAGE GRADE AT THE TRUNK).
   b. ALL EXCAVATION WITHIN THE CRZ SHALL BE PERFORMED USING HAND TOOLS. NO MACHINE EXCAVATION OR TRENCHING OF ANY KIND SHALL BE ALLOWED WITHIN THE CRZ.
   c. ALTER ALIGNMENT OF PIPE TO AVOID TREE ROOTS 1-1/2" AND LARGER IN DIAMETER. WHERE TREE ROOTS 1-1/2" AND LARGER IN DIAMETER ARE ENCOUNTERED IN THE FIELD, TUNNEL UNDER SUCH ROOTS. WRAP EXPOSED ROOTS WITH SEVERAL LAYERS OF BURLAP AND KEEP MOIST. CLOSE ALL TRENCHES WITHIN THE CANOPY DRIP LINES WITHIN 24 HOURS.
   d. ALL SEVERED ROOTS SHALL BE HAND PRUNED WITH SHARP TOOLS AND ALLOWED TO AIR-DRY. DO NOT USE ANY SORT OF SEALERS OR WOUND PAINTS.

D. TREE PLANTING
1. TREE PLANTING HOLES SHALL BE EXCAVATED TO MINIMUM WIDTH OF TWO TIMES THE WIDTH OF THE ROOTBALL, AND TO A DEPTH EQUAL TO THE DEPTH OF THE ROOTBALL LESS TWO TO FOUR INCHES.
2. SCARIFY THE SIDES AND BOTTOM OF THE PLANTING HOLE PRIOR TO THE PLACEMENT OF THE TREE. REMOVE ANY GLAZING THAT MAY HAVE BEEN CAUSED DURING THE EXCAVATION OF THE HOLE.
3. FOR CONTAINER AND BOX TREES, TO REMOVE ANY POTENTIALLY GIRDLING ROOTS AND OTHER ROOT DEFECTS, THE CONTRACTOR SHALL SHAVE A 1" LAYER OFF OF THE SIDES AND BOTTOM OF THE ROOTBALL OF ALL TREES JUST BEFORE PLACING INTO THE PLANTING PIT. DO NOT "TEASE" ROOTS OUT FROM THE ROOTBALL.
4. INSTALL THE TREE ON UNDISTURBED SUBGRADE SO THAT THE TOP OF THE ROOTBALL IS TWO TO FOUR INCHES ABOVE THE SURROUNDING GRADE.
5. BACKFILL THE TREE HOLE UTILIZING THE EXISTING TOPSOIL FROM ON-SITE. ROCKS LARGER THAN 1" DIA. AND ALL OTHER DEBRIS SHALL BE REMOVED FROM THE SOIL PRIOR TO THE BACKFILL. SHOULD ADDITIONAL SOIL BE REQUIRED TO ACCOMPLISH THIS TASK, USE STORED TOPSOIL FROM ON-SITE OR IMPORT ADDITIONAL TOPSOIL FROM OFF-SITE AT NO ADDITIONAL COST TO THE OWNER. IMPORTED TOPSOIL SHALL BE OF SIMILAR TEXTURAL CLASS AND COMPOSITION IN THE ON-SITE SOIL.
6. TREES SHALL NOT BE STAKED UNLESS LOCAL CONDITIONS (SUCH AS HEAVY WINDS OR SLOPES) REQUIRE STAKES TO KEEP TREES UPRIGHT. SHOULD STAKING BE REQUIRED, THE TOTAL NUMBER OF TREE STAKES (BEYOND THE MINIMUMS LISTED BELOW) WILL BE LEFT TO THE LANDSCAPE CONTRACTOR'S DISCRETION. SHOULD ANY TREES FALL OR LEAN, THE LANDSCAPE CONTRACTOR SHALL STRAIGHTEN THE TREE, OR REPLACE IT SHOULD IT BECOME DAMAGED. TREE STAKING SHALL ADHERE TO THE FOLLOWING GUIDELINES:
   a. 1"-2" TREES — TWO STAKES PER TREE
   b. 2-1/2"-4" TREES — THREE STAKES PER TREE
   c. TREES OVER 4" CALIPER — GUY AS NEEDED
   d. MULTI-TRUNK TREES — THREE STAKES PER TREE MINIMUM, QUANTITY AND POSITIONS AS NEEDED TO STABILIZE THE TREE
   e. MULTI-TRUNK TREES — THREE STAKES PER TREE MINIMUM, QUANTITY AND POSITIONS AS NEEDED TO STABILIZE THE TREE
7. UPON COMPLETION OF PLANTING, CONSTRUCT AN EARTH WATERING BASIN AROUND THE TREE. COVER THE INTERIOR OF THE TREE RING WITH THE WEED BARRIER CLOTH AND TOPDRESS WITH MULCH (TYPE AND DEPTH PER PLANS).

E. SHRUB, PERENNIAL, AND GROUNDCOVER PLANTING
1. DIG THE PLANTING HOLES TWICE AS WIDE AND 2" LESS DEEP THAN EACH PLANT'S ROOTBALL. INSTALL THE PLANT IN THE HOLE. BACKFILL AROUND THE PLANT WITH SOIL AMENDED PER SOIL TEST RECOMMENDATIONS.
2. INSTALL THE WEED BARRIER CLOTH, OVERLAPPING IT AT THE ENDS. UTILIZE STEEL STAPLES TO KEEP THE WEED BARRIER CLOTH IN PLACE.
3. WHEN PLANTING IS COMPLETE, INSTALL MULCH (TYPE AND DEPTH PER PLANS) OVER ALL PLANTING BEDS, COVERING THE ENTIRE PLANTING AREA.

F. SODDING
1. SOD VARIETY TO BE AS SPECIFIED ON THE LANDSCAPE PLAN.
2. LAY SOD WITHIN 24 HOURS FROM THE TIME OF STRIPPING. DO NOT LAY IF THE GROUND IS FROZEN.
3. LAY THE SOD TO FORM A SOLID MASS WITH TIGHTLY FITTED JOINTS. BUTT ENDS AND SIDES OF SOD STRIPS - DO NOT OVERLAP. STAGGER STRIPS TO OFFSET JOINTS IN ADJACENT COURSES.
4. ROLL THE SOD TO ENSURE GOOD CONTACT OF THE SOD'S ROOT SYSTEM WITH THE SOIL UNDERNEATH.
5. WATER THE SOD THOROUGHLY WITH A FINE SPRAY IMMEDIATELY AFTER PLANTING TO OBTAIN AT LEAST SIX INCHES OF PENETRATION INTO THE SOIL BELOW THE SOD.

G. MULCH
1. INSTALL MULCH TOPDRESSING, TYPE AND DEPTH PER MULCH NOTE, IN ALL PLANTING AREAS AND TREE RINGS.
2. DO NOT INSTALL MULCH WITHIN 6" OF TREE ROOT FLARE AND WITHIN 24" OF HABITABLE STRUCTURES, EXCEPT AS MAY BE NOTED ON THESE PLANS. MULCH COVER WITHIN 6" OF CONCRETE WALKS AND CURBS SHALL NOT PROTRUDE ABOVE THE FINISH SURFACE OF THE WALKS AND CURBS. MULCH COVER WITHIN 12" OF WALLS SHALL BE AT LEAST 3" LOWER THAN THE TOP OF WALL.

H. CLEAN UP
1. DURING LANDSCAPE PREPARATION AND PLANTING, KEEP ALL PAVEMENT CLEAN AND ALL WORK AREAS IN A NEAT, ORDERLY CONDITION.
2. DISPOSED LEGALLY OF ALL EXCAVATED MATERIALS OFF THE PROJECT SITE.

I. INSPECTION AND ACCEPTANCE
1. UPON COMPLETION OF THE WORK, THE LANDSCAPE CONTRACTOR SHALL PROVIDE THE SITE CLEAN, FREE OF DEBRIS AND TRASH, AND SUITABLE FOR USE AS INTENDED. THE LANDSCAPE CONTRACTOR SHALL THEN REQUEST AN INSPECTION BY THE OWNER TO DETERMINE FINAL ACCEPTABILITY.
2. WHEN THE INSPECTED PLANTING WORK DOES NOT COMPLY WITH THE CONTRACT DOCUMENTS, THE LANDSCAPE CONTRACTOR SHALL REPLACE AND/OR REPAIR THE REJECTED WORK TO THE OWNER'S SATISFACTION WITHIN 24 HOURS.
3. THE LANDSCAPE MAINTENANCE PERIOD WILL NOT COMMENCE UNTIL THE LANDSCAPE WORK HAS BEEN RE-INSPECTED BY THE OWNER AND FOUND TO BE ACCEPTABLE. AT THAT TIME, A WRITTEN NOTICE OF FINAL ACCEPTANCE WILL BE ISSUED BY THE OWNER, AND THE MAINTENANCE AND GUARANTEE PERIODS WILL COMMENCE.

J. LANDSCAPE MAINTENANCE
1. THE LANDSCAPE CONTRACTOR SHALL BE RESPONSIBLE FOR THE MAINTENANCE OF ALL WORK SHOWN ON THESE PLANS FOR 90 DAYS BEYOND FINAL ACCEPTANCE OF ALL LANDSCAPE WORK BY THE OWNER. LANDSCAPE MAINTENANCE SHALL INCLUDE WEEKLY SITE VISITS FOR THE FOLLOWING ACTIONS (AS APPROPRIATE): PROPER PRUNING, RESTAKING OF TREES, RESETTING OF PLANTS THAT HAVE SETTLED, MOWING AND AERATION OF LAWNS, WEEDING, TREATING FOR INSECTS AND DISEASES,REPLACEMENT OF MULCH, REMOVAL OF LITTER, REPAIRS TO THE IRRIGATION SYSTEM DUE TO FAULTY PARTS AND/OR WORKMANSHIP, AND THE APPROPRIATE WATERING OF ALL PLANTINGS. THE LANDSCAPE CONTRACTOR SHALL MAINTAIN THE IRRIGATION SYSTEM IN PROPER WORKING ORDER, WITH SCHEDULING ADJUSTMENTS BY SEASON TO MAXIMIZE WATER CONSERVATION.
2. SHOULD SEEDED AND/OR SODDED AREAS NOT BE COVERED BY AN AUTOMATIC IRRIGATION SYSTEM, THE LANDSCAPE CONTRACTOR SHALL BE RESPONSIBLE FOR WATERING THESE AREAS AND OBTAINING A FULL, HEALTHY STAND OF PLANTS AT NO ADDITIONAL COST TO THE OWNER.
3. TO ACHIEVE FINAL ACCEPTANCE AT THE END OF THE MAINTENANCE PERIOD, ALL OF THE FOLLOWING CONDITIONS MUST OCCUR:
   a. THE LANDSCAPE SHALL SHOW ACTIVE, HEALTHY GROWTH (WITH EXCEPTIONS MADE FOR SEASONAL DORMANCY). ALL PLANTS NOT MEETING THIS CONDITION SHALL BE REJECTED AND REPLACED BY HEALTHY PLANT MATERIAL PRIOR TO FINAL ACCEPTANCE.
   b. ALL HARDSCAPE SHALL BE CLEANED PRIOR TO FINAL ACCEPTANCE.
   c. SODDED AREAS MUST BE ACTIVELY GROWING AND MUST REACH A MINIMUM HEIGHT OF 1 1/2 INCHES BEFORE FIRST MOWING. BARE AREAS LARGER THAN TWELVE SQUARE INCHES MUST BE RESODDED (AS APPROPRIATE) PRIOR TO FINAL ACCEPTANCE. ALL SODDED TURF SHALL BE NEATLY MOWED.

K. WARRANTY PERIOD, PLANT GUARANTEE AND REPLACEMENTS
1. THE LANDSCAPE CONTRACTOR SHALL GUARANTEE ALL TREES, SHRUBS, PERENNIALS, SOD, AND IRRIGATION SYSTEMS FOR A PERIOD OF ONE YEAR FROM THE DATE OF THE OWNER'S FINAL ACCEPTANCE (90 DAYS FOR ANNUAL PLANTS). THE CONTRACTOR SHALL REPLACE, AT HIS OWN EXPENSE AND TO THE SATISFACTION OF THE OWNER, ANY PLANTS WHICH DIE IN THAT TIME, OR REPAIR ANY PORTIONS OF THE IRRIGATION SYSTEM WHICH OPERATE IMPROPERLY.
2. AFTER THE INITIAL MAINTENANCE PERIOD AND DURING THE GUARANTEE PERIOD, THE LANDSCAPE CONTRACTOR SHALL ONLY BE RESPONSIBLE FOR REPLACEMENT OF PLANTS WHEN PLANT DEATH CANNOT BE ATTRIBUTED DIRECTLY TO OVERWATERING OR OTHER DAMAGE BY HUMAN ACTIONS.

L. PROVIDE A MINIMUM OF (2) COPIES OF RECORD DRAWINGS TO THE OWNER UPON COMPLETION OF WORK. A RECORD DRAWING IS A RECORD OF ALL CHANGES THAT OCCURRED IN THE FIELD AND THAT ARE DOCUMENTED THROUGH CHANGE ORDERS, ADDENDA, OR CONTRACTOR/CONSULTANT DRAWING MARKUPS.

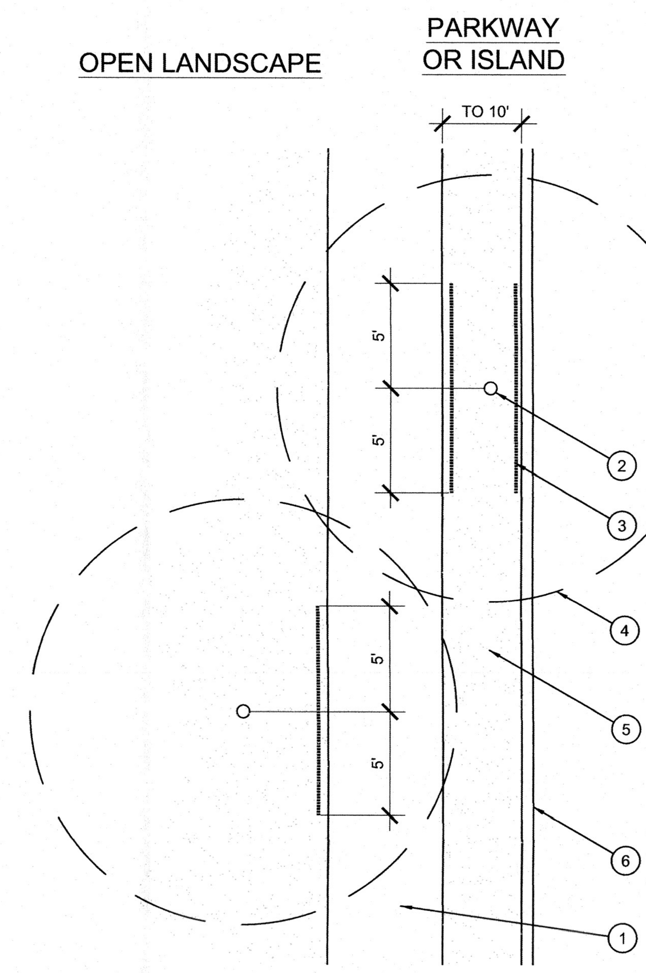

1. TYPICAL WALKWAY OR PAVING
2. TREE TRUNK
3. LINEAR ROOT BARRIER MATERIAL. SEE PLANTING NOTES FOR TYPE AND MANUFACTURER. INSTALL PER MANUFACTURER'S SPECIFICATIONS.
4. TREE CANOPY
5. TYPICAL PLANTING AREA
6. TYPICAL CURB AND GUTTER

NOTES:
1) INSTALL ROOT BARRIERS NEAR ALL NEWLY-PLANTED TREES THAT ARE LOCATED WITHIN FIVE (5) FEET OF PAVING OR CURBS.
2) BARRIERS SHALL BE LOCATED IMMEDIATELY ADJACENT TO HARDSCAPE. UNDER NO CIRCUMSTANCES SHALL THE CONTRACTOR USE ROOT BARRIERS OF A TYPE THAT COMPLETELY ENCIRCLE THE ROOTBALL.

D ROOT BARRIER - PLAN VIEW
SCALE: NOT TO SCALE

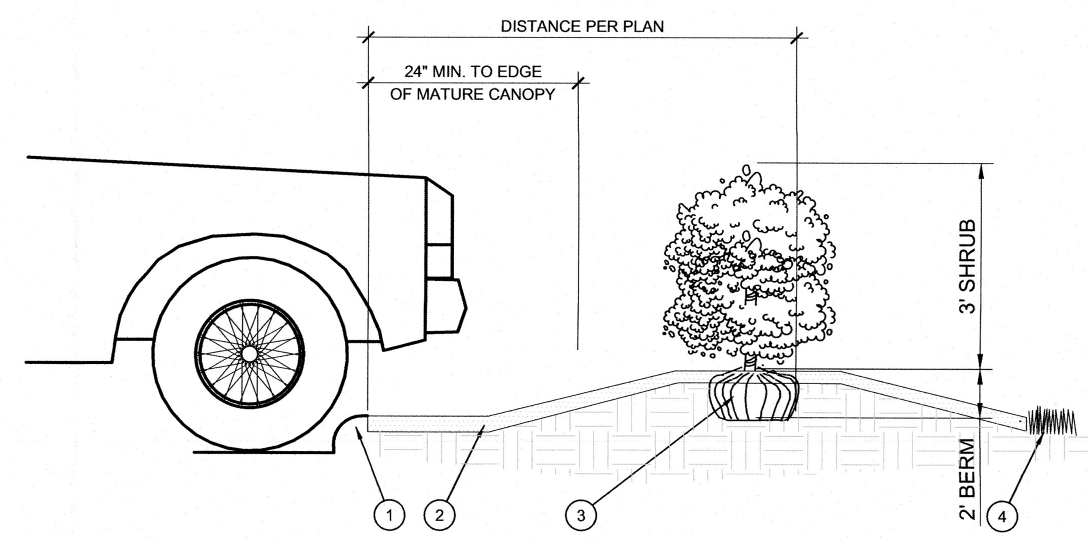

1. CURB.
2. MULCH LAYER.
3. PLANT.
4. TURF (WHERE SHOWN ON PLAN).

E PLANTING AT PARKING AREA
SCALE: NOT TO SCALE

IRRIGATION CONCEPT

1. AN AUTOMATIC IRRIGATION SYSTEM SHALL BE INSTALLED AND OPERATIONAL BY THE TIME OF FINAL INSPECTION. THE ENTIRE IRRIGATION SYSTEM SHALL BE INSTALLED BY A LICENSED AND QUALIFIED IRRIGATION CONTRACTOR.
2. THE IRRIGATION SYSTEM WILL OPERATE ON POTABLE WATER, AND THE SYSTEM WILL HAVE APPROPRIATE BACKFLOW PREVENTION DEVICES INSTALLED TO PREVENT CONTAMINATION OF THE POTABLE SOURCE.
3. ALL NON-TURF PLANTED AREAS SHALL BE DRIP IRRIGATED. SODDED AND SEEDED AREAS SHALL BE IRRIGATED WITH SPRAY OR ROTOR HEADS AT 100% HEAD-TO-HEAD COVERAGE.
4. ALL PLANTS SHARING SIMILAR HYDROZONE CHARACTERISTICS SHALL BE PLACED ON A VALVE DEDICATED TO PROVIDE THE NECESSARY WATER REQUIREMENTS SPECIFIC TO THAT HYDROZONE.
5. THE IRRIGATION SYSTEM SHALL BE DESIGNED AND INSTALLED, TO THE MAXIMUM EXTENT POSSIBLE, TO CONSERVE WATER BY USING THE FOLLOWING DEVICES AND SYSTEMS: MATCHED PRECIPITATION RATE TECHNOLOGY ON ROTOR AND SPRAY HEADS (WHEREVER POSSIBLE), RAIN SENSORS, AND MULTI-PROGRAM COMPUTERIZED IRRIGATION CONTROLLERS FEATURING SENSORY INPUT CAPABILITIES.
6. ALL IRRIGATION SHALL MEET THE REQUIREMENTS OF THE CITY OF ROCKWALL'S UDC (SUBSECTION 05.04, OF ARTICLE 08)

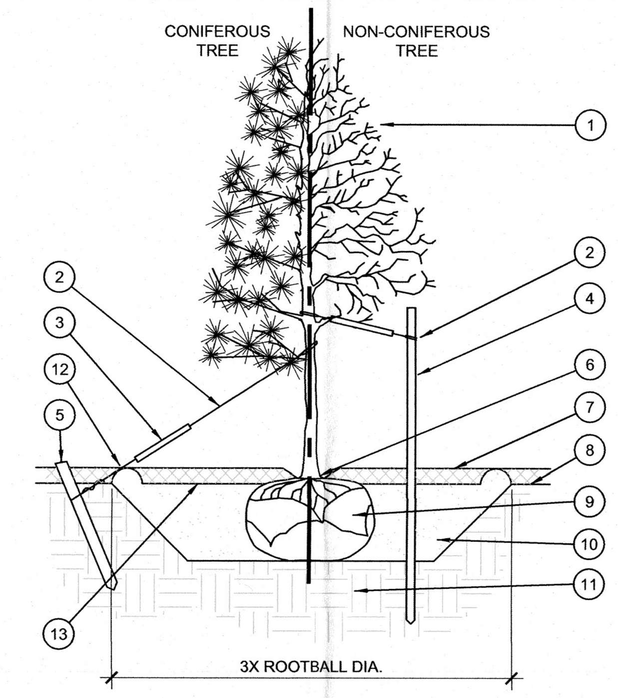

STAKING EXAMPLES (PLAN VIEW)

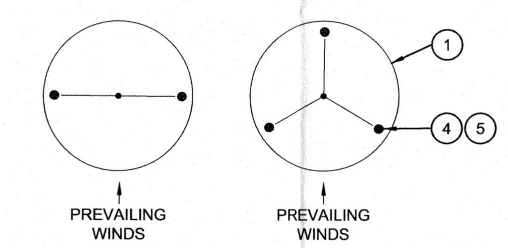

A TREE PLANTING
SCALE: NOT TO SCALE

1. TREE CANOPY.
2. CINCH-TIES (24" BOX/2" CAL. TREES AND SMALLER) OR 12 GAUGE GALVANIZED WIRE WITH NYLON TREE STRAPS AT TREE AND STAKE (36" BOX/2.5" CAL. TREES AND LARGER). SECURE TIES OR STRAPS TO TRUNK JUST ABOVE LOWEST MAJOR BRANCHES.
3. 24" X 3/4" P.V.C. MARKERS OVER WIRES.
4. GREEN STEEL T-POSTS. EXTEND POSTS 12" MIN. INTO UNDISTURBED SOIL.
5. PRESSURE-TREATED WOOD DEADMAN, TWO PER TREE (MIN.). BURY OUTSIDE OF PLANTING PIT AND 18" MIN. INTO UNDISTURBED SOIL.
6. TRUNK FLARE.
7. MULCH, TYPE AND DEPTH PER PLANS. DO NOT PLACE MULCH WITHIN 6" OF TRUNK.
8. FINISH GRADE.
9. ROOT BALL.
10. BACKFILL. AMEND AND FERTILIZE ONLY AS RECOMMENDED IN SOIL FERTILITY ANALYSIS.
11. UNDISTURBED NATIVE SOIL.
12. 4" HIGH EARTHEN WATERING BASIN.
13. FINISH GRADE.

NOTES:
1. SCARIFY SIDES OF PLANTING PIT PRIOR TO SETTING TREE.
2. REMOVE EXCESS SOIL APPLIED ON TOP OF THE ROOTBALL THAT COVERS THE ROOT FLARE. THE PLANTING HOLE DEPTH SHALL BE SUCH THAT THE ROOTBALL RESTS ON UNDISTURBED SOIL, AND THE ROOT FLARE IS 2"-4" ABOVE FINISH GRADE.
3. FOR B&B TREES, CUT OFF BOTTOM 1/3 OF WIRE BASKET BEFORE PLACING TREE IN HOLE, CUT OFF AND REMOVE REMAINDER OF BASKET AFTER TREE IS SET IN HOLE, REMOVE ALL NYLON TIES, TWINE, ROPE, AND OTHER PACKING MATERIAL. REMOVE AS MUCH BURLAP FROM AROUND ROOTBALL AS IS PRACTICAL.
4. REMOVE ALL NURSERY STAKES AFTER PLANTING.
5. FOR TREES 36" BOX/2.5" CAL. AND LARGER, USE THREE STAKES OR DEADMEN (AS APPROPRIATE), SPACED EVENLY AROUND TREE.
6. STAKING SHALL BE TIGHT ENOUGH TO PREVENT TRUNK FROM BENDING, BUT LOOSE ENOUGH TO ALLOW SOME TRUNK MOVEMENT IN WIND.

EVERGREEN DESIGN GROUP
(800) 680-6630
15455 Dallas Pkwy, Ste 600
Addison, TX 75001
www.EvergreenDesignGroup.com

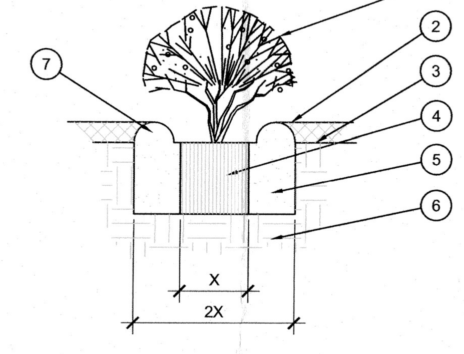

1. SHRUB, PERENNIAL, OR ORNAMENTAL GRASS.
2. MULCH, TYPE AND DEPTH PER PLANS. PLACE NO MORE THAN 1" OF MULCH WITHIN 6" OF PLANT CENTER.
3. FINISH GRADE.
4. ROOT BALL.
5. BACKFILL. AMEND AND FERTILIZE ONLY AS RECOMMENDED IN SOIL FERTILITY ANALYSIS.
6. UNDISTURBED NATIVE SOIL.
7. 3" HIGH EARTHEN WATERING BASIN.

B SHRUB AND PERENNIAL PLANTING
SCALE: NTS

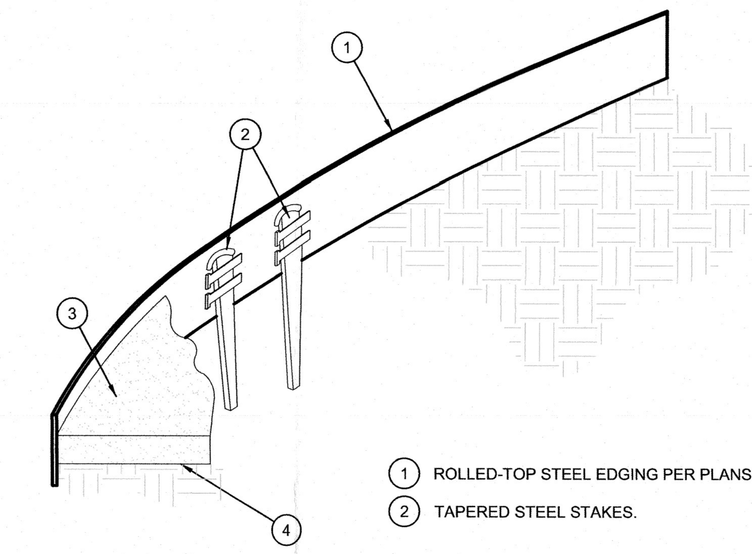

1. ROLLED-TOP STEEL EDGING PER PLANS.
2. TAPERED STEEL STAKES.
3. MULCH, TYPE AND DEPTH PER PLANS.
4. FINISH GRADE.

NOTES:
1) INSTALL EDGING SO THAT STAKES WILL BE ON INSIDE OF PLANTING BED.
2) BOTTOM OF EDGING SHALL BE BURIED A MINIMUM OF 1" BELOW FINISH GRADE.
3) TOP OF MULCH SHALL BE 1" LOWER THAN TOP OF EDGING.

C STEEL EDGING
SCALE: NOT TO SCALE

APPROVED:
I HEREBY CERTIFY THAT THE ABOVE AND FOREGOING SITE PLAN FOR A DEVELOPMENT IN THE CITY OF ROCKWALL, TEXAS, WAS APPROVED BY THE PLANNING & ZONING COMMISSION OF THE CITY OF ROCKWALL ON THE 13th DAY OF Sept., 2022

WITNESS OUR HANDS, THIS 15th DAY OF March, 2023.

PLANNING & ZONING COMMISSION, CHAIRMAN — DIRECTOR OF PLANNING AND ZONING

NO.	DATE	REVISION

URBAN STRUCTURE
8140 Walnut Hill Lane, Suite 905
Dallas, Texas 75231
Firm Registration #F-22252
TEL: 214.295.5775
www.urbanstruct.com

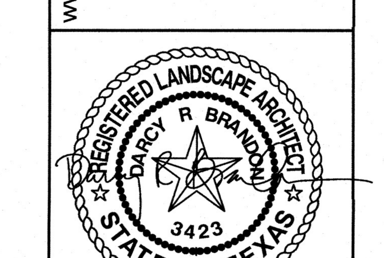

01/31/2023

PROJECT:
ADVANTAGE STORAGE
1701 STATE HIGHWAY 276
OUT OF THE JAMES M. ALLEN SURVEY, ABSTRACT NO. 2
CITY OF ROCKWALL, ROCKWALL COUNTY, TEXAS

SHEET TITLE:
PLANTING DETAILS & SPECS

PREPARED ON:	07/14/2022
CLIENT:	ADVANTAGE STORAGE
DRAWN BY:	LL
DESIGNER:	LL
REVIEWER:	BP
U.S. PROJECT:	22577

SHEET
LP-2

CITY CASE NO. ######

FILE NAME: ADVANTAGE STORAGE-ROCKWALL LP_2023-01-31.DWG
FILE LOCATION: C:\Users\darcy\Documents\DBLA_PROJECTS\2022\EDG\Advantage Storage - Rockwall, TX\Advantage Storage-Rockwall LP_2023-01-31.dwg
LAST MODIFIED ON: 1/31/2023 3:26 PM
PLOTTED ON: 1/31/2023 3:46 PM

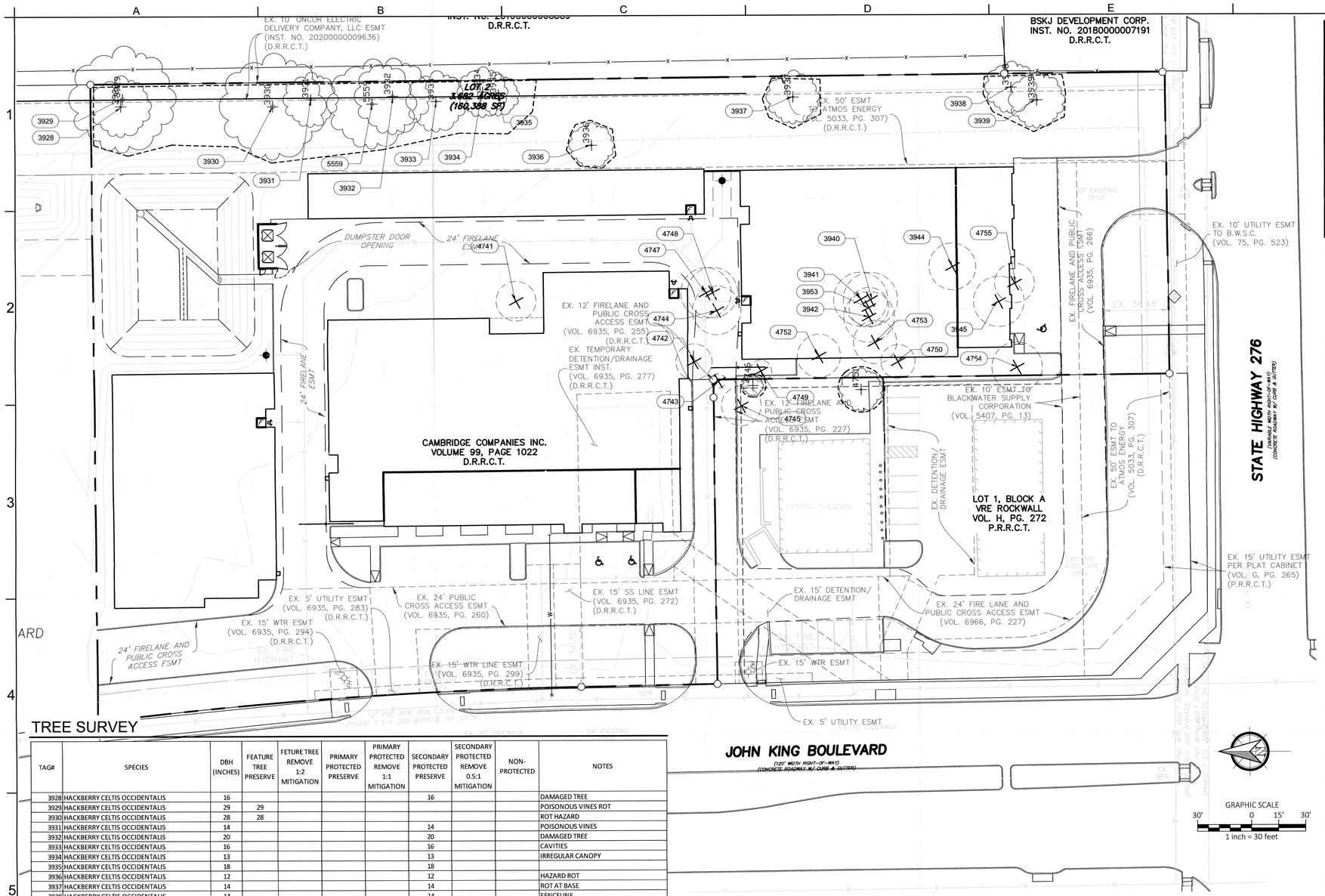

VICINITY MAP
(NOT TO SCALE)

EVERGREEN DESIGN GROUP
(800) 680-6630
15455 Dallas Pkwy., Ste 600
Addison, TX 75001
www.EvergreenDesignGroup.com

LEGEND

- TREE TAG NUMBER
- EXISTING TREES TO BE PROTECTED IN PLACE
- TREE PROTECTION FENCE
- TREE TAG NUMBER (XXXX)
- EXISTING TREES TO BE REMOVED

NOTE: TREE PROTECTION FOR ANY PRESERVED OR RELOCATED TREES MUST BE PROVIDED PER DETAILS AND SPECIFICATIONS ON SHEET TD-2. THESE MUST BE UP PRIOR TO THE COMMENCEMENT OF ANY WORK AND MAINTAINED THROUGHOUT CONSTRUCTION.

NOTE: ALL TREE TRIMMING MUST BE APPROVED BY THE OWNER AND LOCAL JURISDICTION PRIOR TO COMMENCEMENT OF WORK. ALL TREE TRIMMING MUST BE DONE BY AN ISA CERTIFIED ARBORIST IN ACCORDANCE WITH LOCAL TREE PRESERVATION ORDINANCE.

SEE SHEET LP-1 FOR PROPOSED REPLACEMENT TREES FOR MITIGATION.

TREE SURVEY

TAG#	SPECIES	DBH (INCHES)	FEATURE TREE PRESERVE	FETURE TREE REMOVE 1:2 MITIGATION	PRIMARY PROTECTED PRESERVE	PRIMARY PROTECTED REMOVE 1:1 MITIGATION	SECONDARY PROTECTED PRESERVE	SECONDARY PROTECTED REMOVE 0.5:1 MITIGATION	NON-PROTECTED	NOTES
3928	HACKBERRY CELTIS OCCIDENTALIS	16					16			DAMAGED TREE
3929	HACKBERRY CELTIS OCCIDENTALIS	29	29							POISONOUS VINES ROT
3930	HACKBERRY CELTIS OCCIDENTALIS	28	28							ROT HAZARD
3931	HACKBERRY CELTIS OCCIDENTALIS	14					14			POISONOUS VINES
3932	HACKBERRY CELTIS OCCIDENTALIS	20					20			DAMAGED TREE
3933	HACKBERRY CELTIS OCCIDENTALIS	16					16			CAVITIES
3934	HACKBERRY CELTIS OCCIDENTALIS	13					13			IRREGULAR CANOPY
3935	HACKBERRY CELTIS OCCIDENTALIS	18					18			
3936	HACKBERRY CELTIS OCCIDENTALIS	12					12			HAZARD ROT
3937	HACKBERRY CELTIS OCCIDENTALIS	14					14			ROT AT BASE
3938	HACKBERRY CELTIS OCCIDENTALIS	14					14			FENCELINE
3939	HACKBERRY CELTIS OCCIDENTALIS	15					15			ROT
3940	HACKBERRY CELTIS OCCIDENTALIS	15						15		IRREGULAR CANOPY
3941	HACKBERRY CELTIS OCCIDENTALIS	15						15		CROWDED
3942	HACKBERRY CELTIS OCCIDENTALIS	14						14		IRREGULAR CANOPY
3944	HACKBERRY CELTIS OCCIDENTALIS	13						13		DECLINE
3945	HACKBERRY CELTIS OCCIDENTALIS	14						14		LEANING POISONOUS VINES
3953	HACKBERRY CELTIS OCCIDENTALIS	11						11		POISONOUS VINES IRREGULAR CANOPY
3953	HACKBERRY CELTIS OCCIDENTALIS	18						18		HAZARD ROT
4740	EASTERN RED CEDAR JUNIPEROUS VIRGINIANA	11						11		
4741	EASTERN RED CEDAR JUNIPEROUS VIRGINIANA	11						11		IRREGULAR CANOPY
4742	PEAR PYRUS CALLERYANA	10				10				IRREGULAR CANOPY TRUNKK DECAY
4743	HERCULES CLUB ZANTHOXYLUM CLAVAHERCULIS	4				4				
4744	EASTERN RED CEDAR JUNIPEROUS VIRGINIANA	13.5						13.5		
4745	HACKBERRY CELTIS OCCIDENTALIS	11						11		
4747	EASTERN RED CEDAR JUNIPEROUS VIRGINIANA	14						14		POISONOUS VINES
4748	EASTERN RED CEDAR JUNIPEROUS VIRGINIANA	14						14		IRREGULAR CANOPY POISONOUS VINES
4749	HONEY LOCUST	6							6	NON-PROTECTED TREE
4750	HONEY LOCUST	9.5							9.5	NON-PROTECTED TREE
4752	HONEY LOCUST	12							12	NON-PROTECTED TREE
4753	HACKBERRY CELTIS OCCIDENTALIS	12						12		BRIAR VINES
4754	HACKBERRY CELTIS OCCIDENTALIS	14						14		
4755	HACKBERRY CELTIS OCCIDENTALIS	11						11		IRREGULAR CANOPY POISONOUS VINES
5559	HACKBERRY CELTIS OCCIDENTALIS	24					24			ROT CAVITIES STINGING INSECTS
TOTALS		486	57	0	0	14	176	211.5	27.5	
1:2 MITIGATION				0						
1:1 MITIGATION						14				
0.5:1 MITIGATION								105.75		
TOTAL MITIGATION (INCHES)		119.75								

TREE MITIGATION SUMMARY

TOTAL MITIGATION REQUIRED:	119.75"
MITIGATION PROVIDED BY PLANTING	
4" CALIPER TREES (31) TO BE PLANTED ONSITE:	124.0"
MITIGATION PROVIDED BY PURCHASING PRESERVATION CREDITS (20% OF TOTAL):	0"
TOTAL MITIGATION PROVIDED:	124.0"

TREE SURVEY (CONT.)

TAG#	SPECIES	DBH	COMMENTS
4746	HONEY LOCUST	5.5	OFF SITE, TO REMAIN
4751	HACKBERRY CELTIS OCCIDENTALIS	11	OFF SITE, TO REMAIN

APPROVED:
I HEREBY CERTIFY THAT THE ABOVE AND FOREGOING SITE PLAN FOR A DEVELOPMENT IN THE CITY OF ROCKWALL, TEXAS, WAS APPROVED BY THE PLANNING & ZONING COMMISSION OF THE CITY OF ROCKWALL ON THE 13th DAY OF Sept., 2022

WITNESS OUR HANDS, THIS 15th DAY OF March, 2023

PLANNING & ZONING COMMISSION, CHAIRMAN

DIRECTOR OF PLANNING AND ZONING

SITE DATA TABLE

EXISTING USE:	VACANT	
PROPOSED USE:	MINI-WAREHOUSE & OFFICE SUITES	
EXISTING ZONING DISTRICT:	PLANNED DEVELOPMENT (PD-10)	
SITE AREA (LOT 2):	3.682 AC (160,388 SF)	
SITE AREA (LOT 3):	2.565 AC (111,719 SF)	
TOTAL SITE AREA:	6.247 AC (272,107 SF)	
FOR LOT 2 ONLY		
BUILDING AREA	MINI-WAREHOUSE	OFFICE SUITES
BUILDING A (3 STORIES):	69,250 SF	4,400 SF
BUILDING B (1 STORY):	11,350 SF	0 SF
BUILDING C (1 STORY):	4,000 SF	0 SF
BUILDING D (1 STORY):	13,100 SF	3,000 SF
TOTAL BUILDING AREA:	105,100 SF	
TOTAL BUILDING FOOTPRINT AREA:	56,000 SF	
TOTAL STORAGE UNITS:	635 UNITS	
	REQUIRED	PROVIDED
MAXIMUM LOT COVERAGE:	96,233 SF (60%)	56,000 SF (35%)
FLOOR TO AREA RATIO:	4:1	0.66:1
MAXIMUM BUILDING HEIGHT:	60 FT	42 FT
LANDSCAPE AREA:	32,078 SF (20%)	58,982 SF (36.8%)
	MINI-WAREHOUSE	OFFICE SUITES
PARKING REQUIRED:	9 STALLS (3 STALLS + 1/100 UNITS)	25 STALLS (1/300 SF)
TOTAL PARKING REQUIRED:	34 STALLS	
TOTAL PARKING PROVIDED:	34 STALLS	
NOTE: PD-10 REQUIRES COMMERCIAL (C) ZONING STANDARDS TO BE FOLLOWED FOR A NON-RESIDENTIAL DEVELOPMENT.		

NO.	DATE	REVISION

TEL: 214.395.5775
www.urbanstruct.com
URBAN STRUCTURE
8140 Walnut Hill Lane, Suite 905
Dallas, Texas 75231
Firm Registration #F-22352

REGISTERED LANDSCAPE ARCHITECT
STACY R BRANNON
3423
STATE OF TEXAS
01/31/2023

PROJECT:

ADVANTAGE STORAGE
1701 STATE HIGHWAY 276
OUT OF THE JAMES M. ALLEN SURVEY, ABSTRACT NO. 2
CITY OF ROCKWALL, ROCKWALL COUNTY, TEXAS

SHEET TITLE:

TREESCAPE PLAN

PREPARED ON: 07/14/2022
CLIENT: ADVANTAGE STORAGE
DRAWN BY: LL
DESIGNER: LL
REVIEWER: BP
U.S. PROJECT: 22577

SHEET
TD-1

CITY CASE NO. ######

TREE PROTECTION SPECIFICATIONS

MATERIALS

1. FABRIC: 4 FOOT HIGH ORANGE PLASTIC FENCING AS SHOWN ON THE PLANS AND SHALL BE WOVEN WITH 2 INCH MESH OPENINGS SUCH THAT IN A VERTICAL DIMENSION OF 23 INCHES ALONG THE DIAGONALS OF THE OPENINGS THERE SHALL BE AT LEAST 7 MESHES.
2. POSTS: POSTS SHALL BE A MINIMUM OF 72 INCHES LONG AND STEEL 'T' SHAPED WITH A MINIMUM WEIGHT OF 1.3 POUNDS PER LINEAR FOOT.
3. TIE WIRE: WIRE FOR ATTACHING THE FABRIC TO THE T-POSTS SHALL BE NOT LESS THAN NO. 12 GAUGE GALVANIZED WIRE.
4. USED MATERIALS: PREVIOUSLY-USED MATERIALS, MEETING THE ABOVE REQUIREMENTS AND WHEN APPROVED BY THE OWNER, MAY BE USED.

CONSTRUCTION METHODS

1. ALL TREES AND SHRUBS SHOWN TO REMAIN WITHIN THE PROXIMITY OF THE CONSTRUCTION SITE SHALL BE PROTECTED PRIOR TO BEGINNING ANY DEVELOPMENT ACTIVITY.
2. EMPLOY THE SERVICES OF AN ISA (INTERNATIONAL SOCIETY OF ARBORICULTURE) CERTIFIED ARBORIST AND OBTAIN ALL REQUIRED PERMITS TO PRUNE THE EXISTING TREES FOR CLEANING, RAISING AND THINNING, AS MAY BE REQUIRED.
3. PROTECTIVE FENCING SHALL BE ERECTED OUTSIDE THE CRITICAL ROOT ZONE (CRZ, EQUAL TO 1' FROM THE TRUNK FOR EVERY 1" OF DBH) AT LOCATIONS SHOWN IN THE PLANS OR AS DIRECTED BY THE LANDSCAPE CONSULTANT AND/OR CITY ARBORIST, AND IN ACCORDANCE WITH THE DETAILS SHOWN ON THE PLANS. FENCING SHALL BE MAINTAINED AND REPAIRED BY THE CONTRACTOR DURING SITE CONSTRUCTION. TREES IN CLOSE PROXIMITY SHALL BE FENCED TOGETHER, RATHER THAN INDIVIDUALLY.
4. PROTECTIVE FENCE LOCATIONS IN CLOSE PROXIMITY TO STREET INTERSECTIONS OR DRIVES SHALL ADHERE TO THE APPLICABLE JURISDICTION'S SIGHT DISTANCE CRITERIA.
5. THE PROTECTIVE FENCING SHALL BE ERECTED BEFORE SITE WORK COMMENCES AND SHALL REMAIN IN PLACE DURING THE ENTIRE CONSTRUCTION PHASE.
6. THE INSTALLATION POSTS SHALL BE PLACED EVERY 6 FEET ON CENTER AND EMBEDDED TO 18 INCHES DEEP. MESH FABRIC SHALL BE ATTACHED TO THE INSTALLATION POSTS BY THE USE OF SUFFICIENT WIRE TIES TO SECURELY FASTEN THE FABRIC TO THE T-POSTS TO HOLD THE FABRIC IN A STABLE AND UPRIGHT POSITION.
7. WITHIN THE CRZ:
   a. DO NOT CLEAR, FILL OR GRADE IN THE CRZ OF ANY TREE.
   b. DO NOT STORE, STOCKPILE OR DUMP ANY JOB MATERIAL, SOIL OR RUBBISH UNDER THE SPREAD OF THE TREE BRANCHES.
   c. DO NOT PARK OR STORE ANY EQUIPMENT OR SUPPLIES UNDER THE TREE CANOPY.
   d. DO NOT SET UP ANY CONSTRUCTION OPERATIONS UNDER THE TREE CANOPY (SUCH AS PIPE CUTTING AND THREADING, MORTAR MIXING, PAINTING OR LUMBER CUTTING).
   e. DO NOT NAIL OR ATTACH TEMPORARY SIGNS METERS, SWITCHES, WIRES, BRACING OR ANY OTHER ITEM TO THE TREES.
   f. DO NOT PERMIT RUNOFF FROM WASTE MATERIALS INCLUDING SOLVENTS, CONCRETE WASHOUTS, ASPHALT TACK COATS (MC-30 OIL), ETC. TO ENTER THE CRZ. BARRIERS ARE TO BE PROVIDED TO PREVENT SUCH RUNOFF SUBSTANCES FROM ENTERING THE CRZ WHENEVER POSSIBLE, INCLUDING IN AN AREA WHERE RAIN OR SURFACE WATER COULD CARRY SUCH MATERIALS TO THE ROOT SYSTEM OF THE TREE.
8. ROUTE UNDERGROUND UTILITIES TO AVOID THE CRZ. IF DIGGING IS UNAVOIDABLE, BORE UNDER THE ROOTS, OR HAND DIG TO AVOID SEVERING THEM.
9. WHERE EXCAVATION IN THE VICINITY OF TREES MUST OCCUR, SUCH AS FOR IRRIGATION INSTALLATION, PROCEED WITH CAUTION, AND USING HAND TOOLS ONLY.
10. THE CONTRACTOR SHALL NOT CUT ROOTS LARGER THAN ONE INCH IN DIAMETER WHEN EXCAVATION OCCURS NEAR EXISTING TREES. ALL ROOTS LARGER THAN ONE INCH IN DIAMETER ARE TO BE CUT CLEANLY. FOR OAKS ONLY, ALL WOUNDS SHALL BE PAINTED WITH WOUND SEALER WITHIN 30 MINUTES
11. REMOVE ALL TREES, SHRUBS OR BUSHES TO BE CLEARED FROM PROTECTED ROOT ZONE AREAS BY HAND.
12. TREES DAMAGED OR KILLED DUE TO CONTRACTOR'S NEGLIGENCE DURING CONSTRUCTION SHALL BE MITIGATED AT THE CONTRACTOR'S EXPENSE AND TO THE PROJECT OWNER'S AND LOCAL JURISDICTION'S SATISFACTION.
13. ANY TREE REMOVAL SHALL BE APPROVED BY THE OWNER AND LOCAL JURISDICTION PRIOR TO ITS REMOVAL, AND THE CONTRACTOR SHALL HAVE ALL REQUIRED PERMITS FOR SUCH ACTIVITIES.
14. COVER EXPOSED ROOTS AT THE END OF EACH DAY WITH SOIL, MULCH OR WET BURLAP.
15. IN CRITICAL ROOT ZONE AREAS THAT CANNOT BE PROTECTED DUING CONSTRUCTION AND WHERE HEAVY TRAFFIC IS ANTICIPATED, COVER THE SOIL WITH EIGHT INCHES OF ORGANIC MULCH TO MINIMIZE SOIL COMPACTION. THIS EIGHT INCH DEPTH OF MULCH SHALL BE MAINTAINED THROUGHOUT CONSTRUCTION.
16. WATER ALL TREES IMPACTED BY CONSTRUCTION ACTIVITIES, DEEPLY ONCE A WEEK DURING PERIODS OF HOT DRY WEATHER. SPRAY TREE CROWNS WITH WATER PERIODICALLY TO REDUCE DUST ACCUMULATION ON THE LEAVES.
17. WHEN INSTALLING CONCRETE ADJACENT TO THE ROOT ZONE OF A TREE, USE A PLASTIC VAPOR BARRIER BEHIND THE CONCRETE TO PROHIBIT LEACHING OF LIME INTO THE SOIL.
18. CONTRACTOR SHALL REMOVE AND DISPOSE OF ALL TREE PROTECTION FENCING WHEN ALL THREATS TO THE EXISTING TREES FROM CONSTRUCTION-RELATED ACTIVITIES HAVE BEEN REMOVED.

TREE PROTECTION GENERAL NOTES

(A) PRIOR TO THE LAND CLEARING STAGE OF DEVELOPMENT, THE CONTRACTOR SHALL CLEARLY MARK ALL PROTECTED TREES FOR WHICH A TREE REMOVAL PERMIT HAS NOT BEEN ISSUED AND SHALL ERECT BARRIERS FOR THE PROTECTION OF THE TREES ACCORDING TO THE FOLLOWING:
(1) AROUND AN AREA AT OR GREATER THAN A SIX-FOOT RADIUS OF ALL SPECIES OF MANGROVES AND PROTECTED CABBAGE PALMS;
(2) AROUND AN AREA AT OR GREATER THAN THE FULL DRIPLINE OF ALL PROTECTED NATIVE PINES;
(3) AROUND AN AREA AT OR GREATER THAN TWO-THIRDS OF THE DRIPLINE OF ALL OTHER PROTECTED SPECIES.

(B) NO PERSON SHALL ATTACH ANY SIGN, NOTICE OR OTHER OBJECT TO ANY PROTECTED TREE OR FASTEN ANY WIRES, CABLES, NAILS OR SCREWS TO ANY PROTECTED TREE IN ANY MANNER THAT COULD PROVE HARMFUL TO THE PROTECTED TREE, EXCEPT AS NECESSARY IN CONJUNCTION WITH ACTIVITIES IN THE PUBLIC INTEREST.

(C) DURING THE CONSTRUCTION STAGE OF DEVELOPMENT, THE CONTRACTOR SHALL NOT CAUSE OR PERMIT THE CLEANING OF EQUIPMENT OR MATERIAL WITHIN THE OUTSIDE PERIMETER OF THE CROWN (DRIPLINE) OR ON THE NEARBY GROUND OF ANY TREE OR GROUP OF TREES WHICH IS TO BE PRESERVED. WITHIN THE OUTSIDE PERIMETER OF THE CROWN (DRIPLINE) OF ANY TREE OR ON NEARBY GROUND, THE CONTRACTOR SHALL NOT CAUSE OR PERMIT STORAGE OF BUILDING MATERIAL AND/OR EQUIPMENT, OR DISPOSAL OF WASTE MATERIAL SUCH AS PAINTS, OIL, SOLVENTS, ASPHALT, CONCRETE, MORTAR OR ANY OTHER MATERIAL HARMFUL TO THE LIFE OF THE TREE.

(D) NO PERSON SHALL PERMIT ANY UNNECESSARY FIRE OR BURNING WITHIN 30 FEET OF THE DRIPLINE OF A PROTECTED TREE.

(E) ANY LANDSCAPING ACTIVITIES WITHIN THE BARRIER AREA SHALL BE ACCOMPLISHED WITH HAND LABOR.

(F) PRIOR TO ISSUING A CERTIFICATE OF OCCUPANCY OR COMPLIANCE FOR ANY DEVELOPMENT, BUILDING OR STRUCTURE, ALL TREES DESIGNATED TO BE PRESERVED THAT WERE DESTROYED DURING CONSTRUCTION SHALL BE REPLACED BY THE CONTRACTOR WITH TREES OF EQUIVALENT DIAMETER AT BREAST HEIGHT TREE CALIPER AND OF THE SAME SPECIES AS SPECIFIED BY THE CITY ADMINISTRATOR, BEFORE OCCUPANCY OR USE, UNLESS APPROVAL FOR THEIR REMOVAL HAS BEEN GRANTED UNDER PERMIT.

(G) THE CITY ADMINISTRATOR MAY CONDUCT PERIODIC INSPECTIONS OF THE SITE DURING LAND CLEARANCE AND CONSTRUCTION.

(H) IF, IN THE OPINION OF THE CITY ADMINISTRATOR, DEVELOPMENT ACTIVITIES WILL SO SEVERELY STRESS SLASH PINES OR ANY OTHER PROTECTED TREE SUCH THAT THEY ARE MADE SUSCEPTIBLE TO INSECT ATTACK, PREVENTATIVE SPRAYING OF THESE TREES BY THE CONTRACTOR MAY BE REQUIRED.

TREES THAT ARE MARKED TO BE PRESERVED ON A SITE PLAN AND FOR WHICH UTILITIES MUST PASS TROUGH THEIR ROOT PROTECTION ZONES MAY REQUIRE TUNNELING AS OPPOSED TO OPEN TRENCHES. THE DECISION TO TUNNEL WILL BE DETERMINED ON A CASE BY CASE BASIS BY THE ENGINEER.

TUNNELS SHALL BE DUG THROUGH THE ROOT PROTECTION ZONE IN ORDER TO MINIMIZE ROOT DAMAGE.

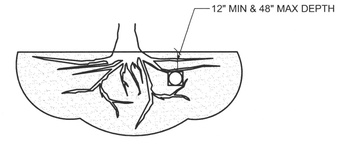

TUNNEL TO MINIMIZE ROOT DAMAGE (TOP) AS OPPOSED TO SURFACE-DUG TRENCHES IN ROOT PROTECTION ZONE WHEN THE 5' MINIMUM DISTANCE FROM TRUNK CAN NOT BE ACHIEVED.

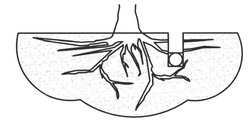

OPEN TRENCHING MAY BE USED IF EXPOSED TREE ROOTS DO NOT EXCEED 3" OR ROOTS CAN BE BENT BACK.

C BORING THROUGH ROOT PROTECTION ZONE
SCALE: NOT TO SCALE

NOTES
1. RETENTION AREAS WILL BE SET AS PART OF THE REVIEW PROCESS AND PRE-CONSTRUCTION MEETING.
2. BOUNDARIES OF RETENTION AREAS MUST BE STAKED AT THE PRE-CONSTRUCTION MEETING AND FLAGGED PRIOR TO ROOT PRUNING.
3. EXACT LOCATION OF ROOT PRUNING SHALL BE DETERMINED IN THE FIELD IN COORDINATION WITH THE FORESTRY INSPECTOR .
4. TRENCH SHOULD BE IMMEDIATELY BACKFILLED WITH EXCAVATED SOIL OR OTHER ORGANIC SOIL AS SPECIFIED PER PLAN OR BY THE FORESTRY INSPECTOR.
5. ROOTS SHALL BE CLEANLY CUT USING VIBRATORY KNIFE OR OTHER ACCEPTABLE EQUIPMENT. ROT PRUNING METHODS AND MEANS MUST BE IN ACCORDANCE WITH ANSI STANDARD A3000.
6. ALL PRUNING MUST BE EXECUTED AT LOD SHOWN ON PLANS OR AS AUTHORIZED IN WRITING BY THE FORESTRY INSPECTOR.
7. SUPPLEMENTAL WATERING MAY BE REQUIRED FOR ROOT PRUNED TREES THROUGHOUT THE GROWING SEASON DURING CONSTRUCTION AND SUBSEQUENT WARRANTY AND MAINTENANCE PERIOD.

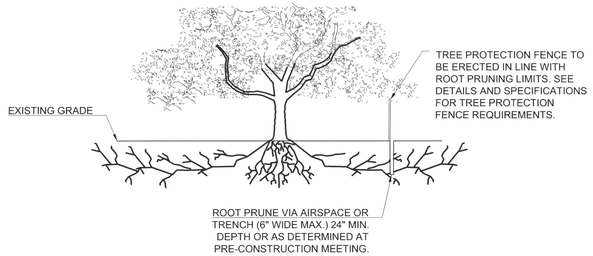

D ROOT PRUNING DETAIL
SCALE: NOT TO SCALE

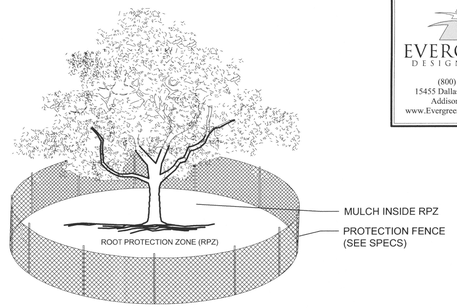

NOTES:
1. THE FENCING LOCATION SHOWN ABOVE IS DIAGRAMATIC ONLY AND WILL CONFORM TO THE DRIP LINE AND BE LIMITED TO PROJECT BOUNDARY. WHERE MULTIPLE ADJACENT TREES WILL BE ENCLOSED BY FENCING, THE FENCING SHALL BE CONTINUOUS AROUND ALL TREES.
2. FOR ACCEPTABLE FENCING MATERIALS SEE SPECIFICATIONS.

A TREE PROTECTION FENCE
SCALE: NOT TO SCALE

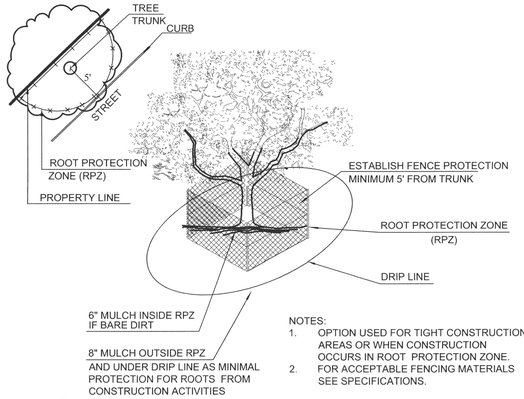

NOTES:
1. OPTION USED FOR TIGHT CONSTRUCTION AREAS OR WHEN CONSTRUCTION OCCURS IN ROOT PROTECTION ZONE.
2. FOR ACCEPTABLE FENCING MATERIALS SEE SPECIFICATIONS.

B TREE PROTECTION FENCE - TIGHT CONSTRUCTION
SCALE: NOT TO SCALE

APPROVED:
I HEREBY CERTIFY THAT THE ABOVE AND FOREGOING SITE PLAN FOR A DEVELOPMENT IN THE CITY OF ROCKWALL, TEXAS, WAS APPROVED BY THE PLANNING & ZONING COMMISSION OF THE CITY OF ROCKWALL ON THE 13th DAY OF Sept., 2022

WITNESS OUR HANDS, THIS 15th DAY OF March, 2023

PLANNING & ZONING COMMISSION, CHAIRMAN — DIRECTOR OF PLANNING AND ZONING

EVERGREEN DESIGN GROUP
(800) 680-6630
15455 Dallas Pkwy., Ste 600
Addison, TX 75001
www.EvergreenDesignGroup.com

NO.	DATE	REVISION

TEL: 214-295-5775
www.urbanstruct.com
URBAN STRUCTURE
8140 Walnut Hill Lane, Suite 905
Dallas, Texas 75231
Firm Registration #F-22252

REGISTERED LANDSCAPE ARCHITECT
NANCY R. BRANDON
3423
STATE OF TEXAS
01/31/2023

ADVANTAGE STORAGE
1701 STATE HIGHWAY 276
OUT OF THE JAMES M. ALLEN SURVEY, ABSTRACT NO. 2
CITY OF ROCKWALL, ROCKWALL COUNTY, TEXAS

TREESCAPE DETAILS & SPECS

PROJECT:
SHEET TITLE:

PREPARED ON: 07/14/2022
CLIENT: ADVANTAGE STORAGE
DRAWN BY: LL
DESIGNER: LL
REVIEWER: BP
U.S. PROJECT: 22577

SHEET
TD-2

CITY CASE NO. ######

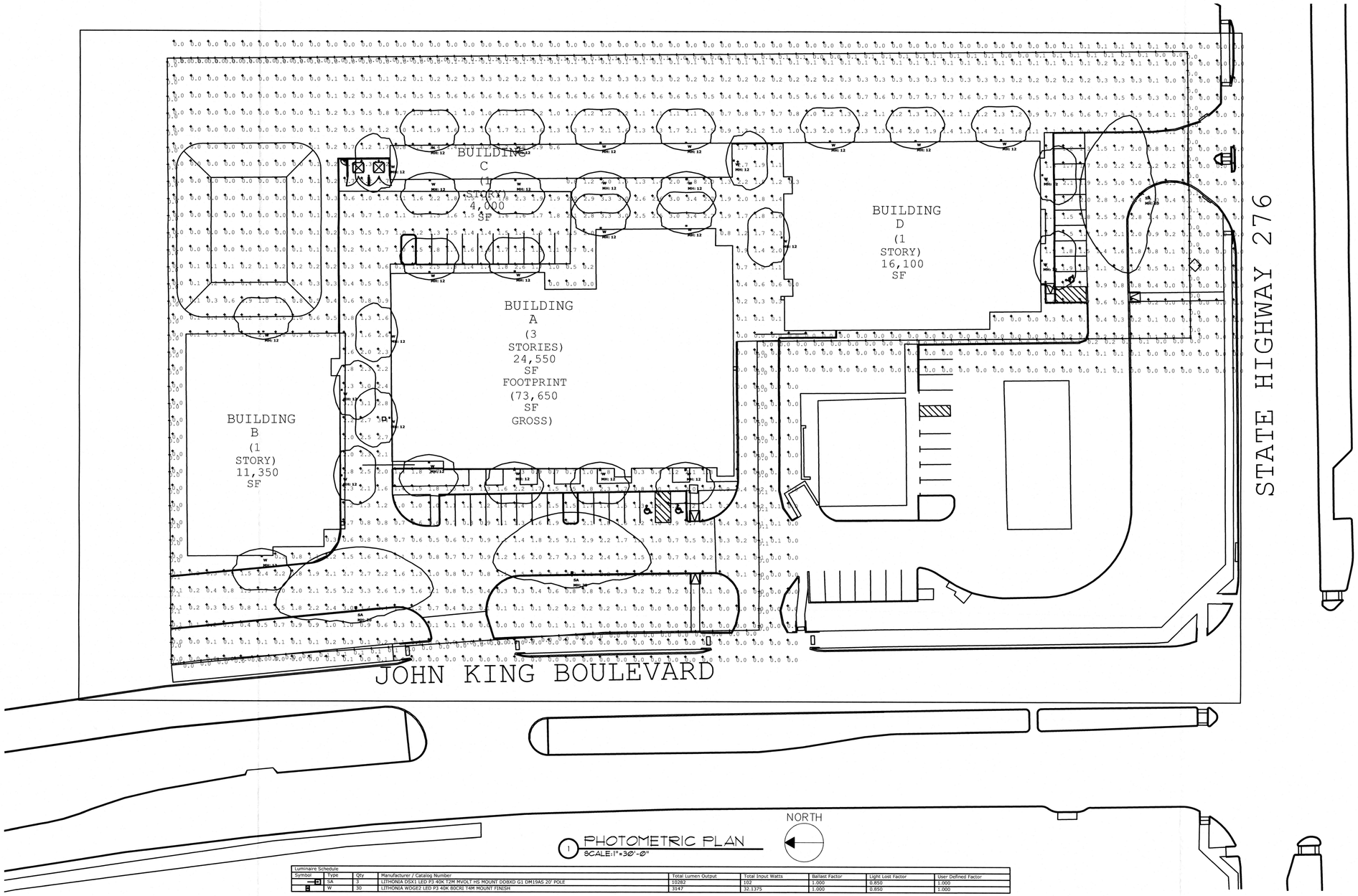

1 PHOTOMETRIC PLAN
SCALE: 1"=30'-0"

Luminaire Schedule								
Symbol	Type	Qty	Manufacturer / Catalog Number	Total Lumen Output	Total Input Watts	Ballast Factor	Light Lost Factor	User Defined Factor
	SA	3	LITHONIA DSX1 LED P3 40K T2M MVOLT HS MOUNT DDBXD G1 DM19AS 20' POLE	10282	102	1.000	0.850	1.000
	W	30	LITHONIA WDGE2 LED P3 40K 80CRI T4M MOUNT FINISH	3147	32.1375	1.000	0.850	1.000

Calculation Summary							
Calculation Grid Location	Calc. Height (Ft.)	Units	Avg	Max	Min	Avg/Min
PROPERTY LINE	N.A.	Fc	0.03	0.2	0.0	N.A.
PARKING ABC & DRIVEWAY		Fc	1.41	3.4	0.0	N.A.
PARKING D & DRIVEWAY		Fc	1.37	3.4	0.0	N.A.

PARKING ABC & DRIVEWAY

Illuminance (Fc)
Average = 1.41
Maximum = 3.4
Minimum = 0.0
Avg/Min Ratio = N.A.
Max/Min Ratio = N.A.

PARKING D & DRIVEWAY

Illuminance (Fc)
Average = 1.37
Maximum = 3.4
Minimum = 0.0
Avg/Min Ratio = N.A.
Max/Min Ratio = N.A.

APPROVED:
I hereby certify that the above and foregoing site plan for development in the City of Rockwall, Texas, was approved by the Planning & Zoning Commission on the 13th day of Sept., 2022.

Planning & Zoning Commission, Chairman

Director of Planning & Zoning

photometric plan

RES Real Engineering Services
Mechanical, Electrical & Plumbing Systems Consultant
4216 ROBIN'S PL GRAPEVINE, TX 76051
PHONE: 817-249-8609 FAX: 817-275-1434
TBAE FIRM #14848 TBAE LICENSE #: 15195
EMAIL: RES@RES-ENGINEERING.COM WEBSITE: RES-ENGINEERING.COM

BACA
100 NORTH TRAVIS STREET
SUITE NO.500
SHERMAN, TEXAS 75090
903.893.5800
www.BACA.team

50% DESIGN REVIEW
NOT FOR REGULATORY APPROVAL, PERMITTING, OR CONSTRUCTION

REVISIONS

NO.	DESCRIPTION	DATE
-	FOR REVIEW	1-3-2022

ADVANTAGE ROCKWALL
1701 STATE HIGHWAY 276
Rockwall, Tx
-

PROJECT NUMBER
-

DATE
12.27.22

SHEET NUMBER
PM1.0

CITY OF ROCKWALL

PLANNING AND ZONING COMMISSION MEMORANDUM

PLANNING AND ZONING DEPARTMENT
385 S. GOLIAD STREET • ROCKWALL, TX 75087
PHONE: (972) 771-7745 • EMAIL: PLANNING@ROCKWALL.COM

TO:	Planning and Zoning Commission
FROM:	Bethany Ross, *Planner*
DATE:	February 11, 2025
SUBJECT:	SP2025-001; *Amended Site Plan for Advantage Storage*

The applicant, Brian Baca of ADV Rockwall John King Property Owner, LLC, is requesting the approval of an Amended Site Plan to update the landscape plan for a previously approved *Mini Warehouse Facility* [*i.e. Case No. SP2022-044*] and its subsequent amendment [*i.e. Case No. SP2022-062*]. The subject property is a 7.154-acre parcel of land (*i.e. Lot 1, Block 1, Cambridge Estates*), zoned Planned Development District 10 (PD-10) for Commercial (C) District land uses, and situated within the SH-205 Overlay (SH-205 OV) District and the SH-276 Overlay (SH- 276 OV) District. The subject property is generally located at the southeast corner of the intersection of John King Boulevard and SH-276. On September 13, 2022, the Planning and Zoning Commission approved the original site plan [*i.e. Case No. SP2022-044*] for the construction of a *Mini-Warehouse Facility* (*i.e. Advantage Storage*) on the subject property. As part of this approval, the Planning and Zoning Commission approved variances to the building design standards that included: [*1*] a variance to the *Primary* and *Secondary* building materials and masonry composition, [*2*] a variance to the minimum the stone requirements, [*3*] a variance to the four (4) sided architecture requirements, and [*4*] a variance to the roof design standards. In addition, the City Council approved exceptions to the conditional land use standards for the *Mini-Warehouse* land use on September 19, 2022, that included: [*1*] an exception to the maximum number of *Mini-Warehouse* units permitted per acre, [*2*] an exception to the maximum building height, and [*3*] an exception to the roof design standards for a *Mini-Warehouse Facility*. On January 10, 2023, the Planning and Zoning Commission approved an Amended Site Plan [*i.e. Case No. SP2022-062*], which allowed for an increase in the variance to the minimum stone requirements. Following these approvals, the applicant submitted civil engineering plans, a final plat, and a building permit for the proposed *Mini-Warehouse Facility*, and the project is currently under construction. On January 17, 2025, the applicant -- *Brian Baca* -- submitted an application requesting to update the landscape plan due to issues raised by Atmos concerning the plantings proposed within the 50-foot Atmos easement on the south side of the property adjacent to SH-276.

The updated landscape plan proposes small to mid-sized shrubbery and an 18”-24” undulating berm. According to Subsection 06.02(E)(1), of Article 05, of the *General Overlay District Development Standards* of the *Unified Development Code (UDC)*, "(a)ll landscape buffers shall incorporate ground cover, a built-up berm and shrubbery or a combination thereof along the entire length of the frontage. Berms and shrubbery shall each have a minimum height of 30-inches and a maximum height of 48- inches. In addition, two (2) canopy trees and four (4) accent trees shall be planted per 100-feet of linear frontage along the Primary Roadway…" In this case, the applicant is requesting a variance to these requirements along SH-276. Specifically, the applicant is [*1*] proposing a berm that does not meet the minimum requirements, [*2*] proposing to remove all canopy trees, and [*3*] proposing to remove all accent trees. Staff should note, that in the original Site Plan case, the applicant proposed compensatory measures to off-set the requested (*above mentioned*) variances. These included: [*1*] <u>*additional shrubs along SH-276*</u>, [*2*] additional shrubs along *Building A*, [*3*] additional shrubs along *Building D*, [*4*] additional shrubs along John King Boulevard, [*5*] using more than the required 20% stone on ten (10) out of the 16 facades focusing on the facades facing the public rights-of-way, [*6*] 16.80% over the required landscape area, [*7*] more than required canopy trees in the landscape buffer along John King Boulevard, [*8*] <u>*more than the required canopy trees along SH-276*</u>, [*9*] <u>*more than the required accent trees along SH-276*</u>, [*10*] extra trees along the detention area. As noted in the original Site Plan case memo, some of these compensatory measures were associated with requirements of the Overlay Districts and were not truly compensatory measures. In addition, based on the applicant’s current request three (3) of these compensatory measures (*i.e. the ones underlined and italicized above*) would be going away with the current request. Staff should also note, that the Planning and Zoning Commission approved an amended site plan (*i.e. SP2022-062*) -- *as outlined above* -- for material changes to the building. As compensatory measures for this case, the applicant proposed: [*1*] <u>*adding large shrubs along SH-276*</u>, [*2*] adding shrubs along the front of *Building A*, and [*3*] <u>*having 37% landscaping in lieu of the required 20%*</u>. In this case the proposed request would change or remove two (2) of the three (3) compensatory measures associated with this case.

According to Subsection 09.01, *Exceptions to the General Standards*, of Article 11, *Development Applications and Review Procedures*, of the Unified Development Code (UDC), "…an applicant may request the Planning and Zoning Commission grant an exception to the provisions contained in the Unified Development Code (UDC), where unique or extraordinary conditions exist or where strict adherence to the technical requirements of the Unified Development Code (UDC) would create an undue hardship." In addition, the code requires that applicant provide compensatory measures that directly offset the requested exception. On January 28, 2025, the Planning and Zoning Commission approved a motion to table the Amended Site Plan for two (2) weeks by a vote of 4-0, with Commissioners Thompson, Hustings, and Conway absent to allow the applicant to bring a landscape plan forward that offers the same number of trees relocated on the property and provide compensatory measures for the requested variance. On February 4, 2025, the applicant provided an updated landscape plan showing that all trees were relocated on the back of the property or within the John King Boulevard landscape buffer. In this case, the applicant is also providing four (4) additional accent trees along John King Boulevard, increased the landscape buffer along SH-276 from 15-feet to 35-feet, and provided double the number of plantings (*in the form of shrubbery*) along SH-276 as compensatory measures to offset the requested variances to the *General Overlay District Standards.* Based on a question raised at the January 28, 2025 Planning and Zoning Commission meeting from Commissioner Womble, staff did confirm that the updated plan does meet the tree mitigation requirements for this property. Based on this, the applicant's request appears to meet the intent of the requirements of the Unified Development Code (UDC); however, variances to the *General Overlay District Standards* are a discretionary decision for the Planning and Zoning Commission and require a supermajority vote (*i.e. a three-fourths vote of those members present*), with a minimum of four (4) votes in the affirmative required for approval.

DEVELOPMENT APPLICATION

City of Rockwall
Planning and Zoning Department
385 S. Goliad Street
Rockwall, Texas 75087

STAFF USE ONLY

PLANNING & ZONING CASE NO.

NOTE: THE APPLICATION IS NOT CONSIDERED ACCEPTED BY THE CITY UNTIL THE PLANNING DIRECTOR AND CITY ENGINEER HAVE SIGNED BELOW.

DIRECTOR OF PLANNING:

CITY ENGINEER:

PLEASE CHECK THE APPROPRIATE BOX BELOW TO INDICATE THE TYPE OF DEVELOPMENT REQUEST [SELECT ONLY ONE BOX]:

PLATTING APPLICATION FEES:

- ☐ MASTER PLAT ($100.00 + $15.00 ACRE) [1]
- ☐ PRELIMINARY PLAT ($200.00 + $15.00 ACRE) [1]
- ☐ FINAL PLAT ($300.00 + $20.00 ACRE) [1]
- ☐ REPLAT ($300.00 + $20.00 ACRE) [1]
- ☐ AMENDING OR MINOR PLAT ($150.00)
- ☐ PLAT REINSTATEMENT REQUEST ($100.00)

SITE PLAN APPLICATION FEES:

- ☐ SITE PLAN ($250.00 + $20.00 ACRE) [1]
- ☒ AMENDED SITE PLAN/ELEVATIONS/LANDSCAPING PLAN ($100.00)

ZONING APPLICATION FEES:

- ☐ ZONING CHANGE ($200.00 + $15.00 ACRE) [1]
- ☐ SPECIFIC USE PERMIT ($200.00 + $15.00 ACRE) [1 & 2]
- ☐ PD DEVELOPMENT PLANS ($200.00 + $15.00 ACRE) [1]

OTHER APPLICATION FEES:

- ☐ TREE REMOVAL ($75.00)
- ☐ VARIANCE REQUEST/SPECIAL EXCEPTIONS ($100.00) [2]

NOTES:
[1]: IN DETERMINING THE FEE, PLEASE USE THE EXACT ACREAGE WHEN MULTIPLYING BY THE PER ACRE AMOUNT. FOR REQUESTS ON LESS THAN ONE ACRE, ROUND UP TO ONE (1) ACRE.
[2]: A *$1,000.00* FEE WILL BE ADDED TO THE APPLICATION FEE FOR ANY REQUEST THAT INVOLVES CONSTRUCTION WITHOUT OR NOT IN COMPLIANCE TO AN APPROVED BUILDING PERMIT.

PROPERTY INFORMATION [PLEASE PRINT]

ADDRESS	NE CORNER JOHN KING BLVD & SH 276				
SUBDIVISION	CAMBRIDGE ESTATES	LOT	1	BLOCK	1
GENERAL LOCATION	NE CORNER JOHN KING BLVD & SH 276				

ZONING, SITE PLAN AND PLATTING INFORMATION [PLEASE PRINT]

CURRENT ZONING	PD10 HIGHWAY OVERLAY	CURRENT USE	UNDER CONSTRUCTION		
PROPOSED ZONING	PD10 HIGHWAY OVERLAY	PROPOSED USE	MINI STORAGE		
ACREAGE	3.682	LOTS [CURRENT]	1	LOTS [PROPOSED]	1

☐ *SITE PLANS AND PLATS: BY CHECKING THIS BOX YOU ACKNOWLEDGE THAT DUE TO THE PASSAGE OF HB3167 THE CITY NO LONGER HAS FLEXIBILITY WITH REGARD TO ITS APPROVAL PROCESS, AND FAILURE TO ADDRESS ANY OF STAFF'S COMMENTS BY THE DATE PROVIDED ON THE DEVELOPMENT CALENDAR WILL RESULT IN THE DENIAL OF YOUR CASE.*

OWNER/APPLICANT/AGENT INFORMATION [PLEASE PRINT/CHECK THE PRIMARY CONTACT/ORIGINAL SIGNATURES ARE REQUIRED]

☐ OWNER	ADV Rockwall John King Property Owner LLC	☐ APPLICANT	SAME
CONTACT PERSON	BRIAN BACA	CONTACT PERSON	
ADDRESS	2221 Lakeside Blvd. Suite 1260	ADDRESS	
CITY, STATE & ZIP	Richardson, TX 75082	CITY, STATE & ZIP	
PHONE	214-308-5225	PHONE	
E-MAIL	bbaca@advconstruction.net	E-MAIL	

NOTARY VERIFICATION [REQUIRED]

BEFORE ME, THE UNDERSIGNED AUTHORITY, ON THIS DAY PERSONALLY APPEARED _____ [*OWNER*] THE UNDERSIGNED, WHO STATED THE INFORMATION ON THIS APPLICATION TO BE TRUE AND CERTIFIED THE FOLLOWING:

"I HEREBY CERTIFY THAT I AM THE OWNER FOR THE PURPOSE OF THIS APPLICATION; ALL INFORMATION SUBMITTED HEREIN IS TRUE AND CORRECT; AND THE APPLICATION FEE OF $ 100.00, TO COVER THE COST OF THIS APPLICATION, HAS BEEN PAID TO THE CITY OF ROCKWALL ON THIS THE 21 ST DAY OF JANUARY, 20 25. BY SIGNING THIS APPLICATION, I AGREE THAT THE CITY OF ROCKWALL (I.E. "CITY") IS AUTHORIZED AND PERMITTED TO PROVIDE INFORMATION CONTAINED WITHIN THIS APPLICATION TO THE PUBLIC. THE CITY IS ALSO AUTHORIZED AND PERMITTED TO REPRODUCE ANY COPYRIGHTED INFORMATION SUBMITTED IN CONJUNCTION WITH THIS APPLICATION, IF SUCH REPRODUCTION IS ASSOCIATED OR IN RESPONSE TO A REQUEST FOR PUBLIC INFORMATION."

GIVEN UNDER MY HAND AND SEAL OF OFFICE ON THIS THE 21 ST DAY OF JANUARY, 20 25.

OWNER'S SIGNATURE

NOTARY PUBLIC IN AND FOR THE STATE OF TEXAS

MY COMMISSION EXPIRES

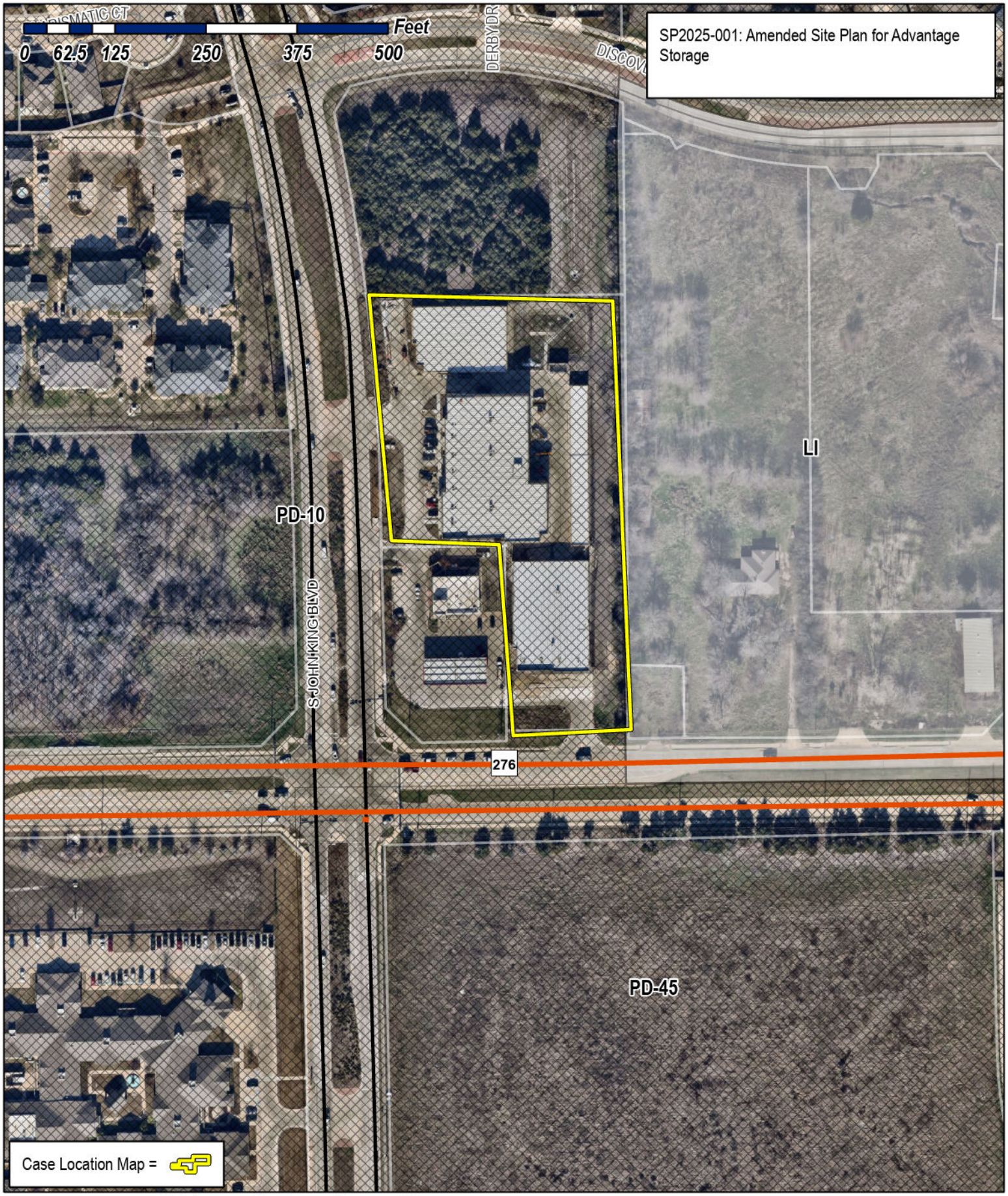

City of Rockwall

Planning & Zoning Department
385 S. Goliad Street
Rockwall, Texas 75087
(P): (972) 771-7745
(W): www.rockwall.com

The City of Rockwall GIS maps are continually under development and therefore subject to change without notice. While we endeavor to provide timely and accurate information, we make no guarantees. The City of Rockwall makes no warranty, express or implied, including warranties of merchantability and fitness for a particular purpose. Use of the information is the sole responsibility of the user.

Advantage Storage
2221 Lakeside Parkway, Suite 1260
Richardson, Texas 75082
972-547-0236
rjones@AdvantageStorage.net

February 4, 2025

Bethany Ross, Planner
City of Rockwall
385 South Goliad
Rockwall, Texas 75087

RE: Request for Amendment to Approved Site Plan Landscaping
COM2023-2392

Bethany,

We are requesting to amend the required Hwy 276 landscape buffer by removing the ten (10) large shrubs and three (3) shade trees because of restrictions for plantings on the high-pressure gas line easement owned by Atmos Energy. To accommodate the intent of the overlay landscape buffer ordinance and restrictions by the owner of the easement, we've proposed the following changes:

- Relocate the three (3) shade trees to the detention pond area
- Install eleven (11) accent trees in the John King overlay landscape buffer. Ordinance requirement is seven (7) accent trees for this length of frontage.
- Increase the width of the front landscape area by 20' (1.33X wider than original), making the total width of the enhanced landscaping 35' in lieu of 15'.
- Install Atmos approved shrubbery and ornamental grass in the additional width of the landscape area at the same density as the original landscape buffer area. This increases the total number of plants between Hwy 276 and the front of the building to more than double the original amount.

The attached revised LP-1 and LP-2, dated 2/03/25, reflect these changes.

We sincerely hope that these accommodations and compensatory measures will make up for the oversight of large shrubs and shade trees being proposed and approved to be planted in a restricted area. We've continued to develop this property in good faith with the intent of presenting a beautiful facility and improvement to the community. These measures are intended to surpass the parkway beautification by landscaping that the City is promoting.

Please inform me immediately of any questions or concerns.

Sincerely,

Rick Jones,
Managing Member of ADV Rockwall John King Property Owner,

Cc: Brian Baca, Advantage Construction

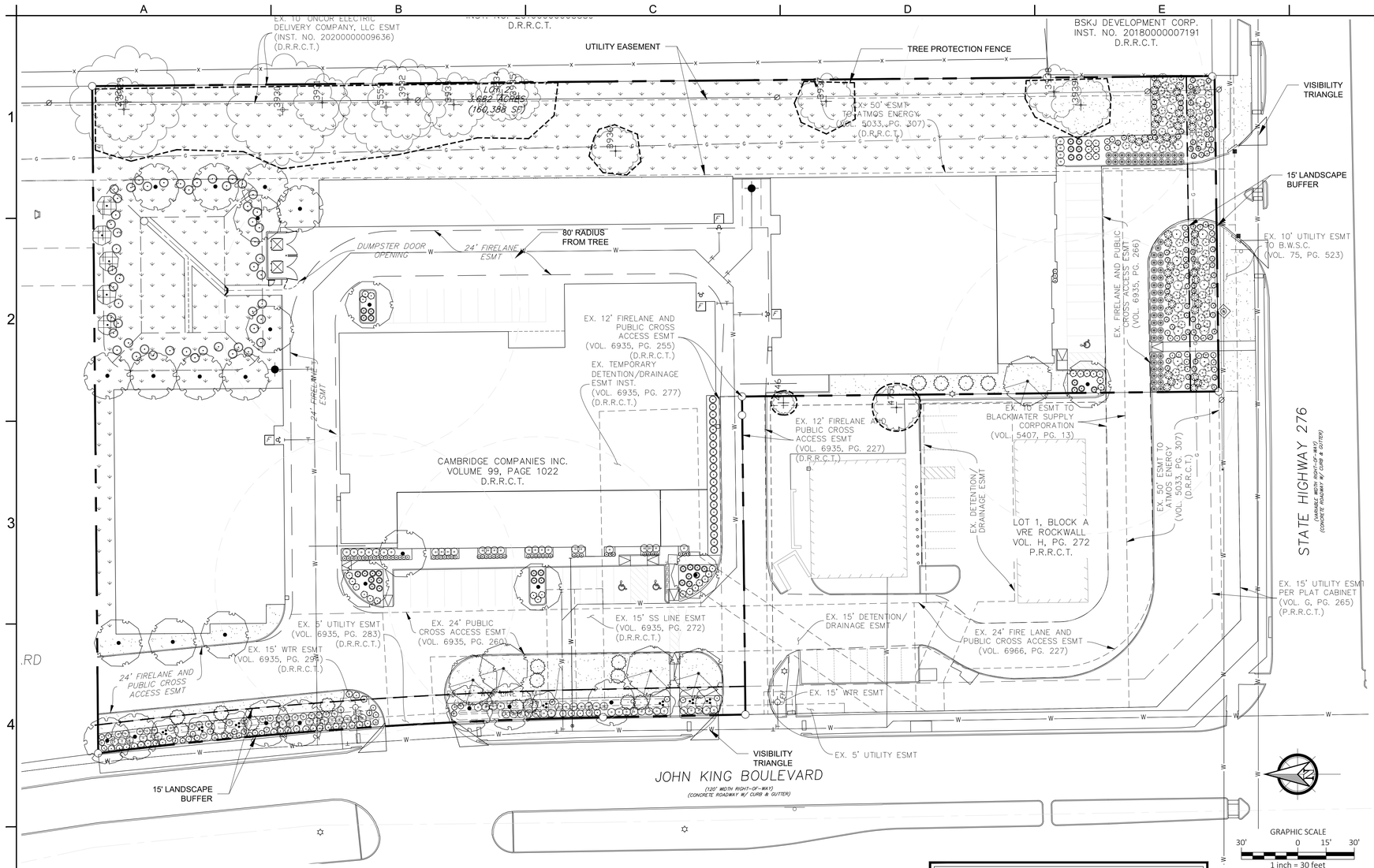

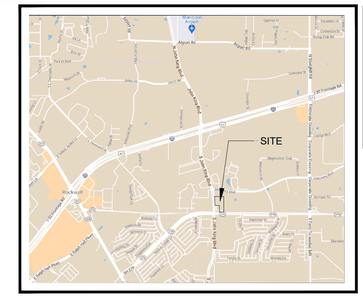

VICINITY MAP
(NOT TO SCALE)

National Presence. Local Expertise.
EVERGREEN DESIGN GROUP
800.680.6630
www.evergreendesigngroup.com
LANDSCAPE ARCHITECTURE
LAND PLANNING · IRRIGATION DESIGN

PLANT SCHEDULE

CANOPY TREES	QTY	BOTANICAL / COMMON NAME	CAL	SIZE
	5	ACER RUBRUM 'OCTOBER GLORY' OCTOBER GLORY MAPLE	4" CAL*	14'-16' HT
	15	QUERCUS MUHLENBERGIA CHINQUAPIN OAK	4" CAL*	14'-16' HT
	11	ULMUS CRASSIFOLIA CEDAR ELM	4" CAL*	16'-18' HT

*12 CANOPY TREES TO BE USED FOR MITIGATION, ALL CANOPY TREES MUST BE 4" CAL.

ACCENT TREES	QTY	BOTANICAL / COMMON NAME	CAL	SIZE
	7	CERCIS CANADENSIS EASTERN REDBUD 3-5 STEMS	3" CAL. 1" / STEM	4` -6` HT
	18	ILEX DECIDUA POSSUM HAW 3-5 STEMS	3" CAL. 1" / STEM	4` -6` HT

LARGE SHRUBS	QTY	BOTANICAL / COMMON NAME	CONT
	5	RHUS VIRENS V. VIRENS EVERGREEN SUMAC	10 GAL 4'-6' HT
	27	TAXUS CUSPIDATA SPREADING YEW	10 GAL 3'-5' HT

MEDIUM SHRUBS	QTY	BOTANICAL / COMMON NAME	CONT
	81	ILEX CORNUTA 'BURFORDII NANA' DWARF BURFORD HOLLY	5 GAL
	23	LOROPETALUM CHINENSE 'PURPLE DAYDREAM' DWARF FRINGEFLOWER	5 GAL.
	54	ILEX VOMITORIA 'NANA' DWARF YAUPON HOLLY	5 GAL
	45	NANDINA DOMESTICA ' HARBOUR DWARF' HARBOUR DWARF NANDINA	5 GAL

SMALL SHRUBS	QTY	BOTANICAL / COMMON NAME	CONT
	63	BERBERIS THUN. 'CRIMSON PYGMY' CRIMSON PYGMY BARBERRY	5 GAL.
	34	HESPERALOE PARVIFLORA RED YUCCA	3 GAL
	62	YUCCA FILAMENTOSA COLOR GUARD YUCCA	3 GAL
	63	LANTANA X 'NEW GOLD' NEW GOLD LANTANA	5 GAL
	64	LANTANA MONTEVIDENSIS CREEPING LANTANA	5 GAL

ORNAMENTAL GRASSES	QTY	BOTANICAL / COMMON NAME	CONT
	51	MUHLENBERGIA RIGENS DEER GRASS	5 GAL

GROUND COVER	QTY	BOTANICAL / COMMON NAME	CONT
	53	RUELLIA BRITTONIANA 'KATIE' KATIE'S DWARF PETUNIA	3 GAL
	10,785 SF	CYNODON 'TIF-TUF' TIF-TUF HYBRID BERMUDA GRASS	SOD
	38,300 SF	BLACKLAND PRAIRIE SEED MIX NATIVE AMERICAN SEED (SEEDSOURCE.COM)	HYDROSEED

LANDSCAPE STANDARDS

05.01 LANDSCAPE BUFFERS - NON-RESIDENTIAL

REQ. ABUTTING A PUBLIC RIGHT-OF-WAY:	15' WIDE BUFFER REQ. W/ 2 CANOPY + 4 ACCENT TREE PER 100 LIN. FT. OF FRONTAGE; GROUND COVER, BUILT-UP BERM AND SHRUBBERY ALONG ENTIRE FRONTAGE, 30" HIGH, MIN.- 48" MAX. HT.
JOHN KING BLVD.: REQUIRED PLANTING: PROVIDED 15' BUFFER:	±344.8' STREET FRONTAGE 7 CANOPY TREES, 14 ACCENT TREES, BERM W/ SHRUBS 7 NEW CANOPY TREES, 17 ACCENT TREES W/ BERM AND SHRUBS (30" HIGH MIN.)
ST. HWY. 276 OVERLAY DISTRICT: ±167.8 STREET FRONTAGE	15' WIDE LANDSCAPE BUFFER W/ GR. COVER, BUILT-UP BERM & SHRUBS (30" MIN.-48" MAX) ALONG ENTIRE LENGTH OF FRONTAGE. 2 CANOPY TREES + 4 ACCENT TREES PER 100 LIN. FEET OF FRONTAGE
REQUIRED PLANTING: PROVIDED 15' BUFFER:	3 CANOPY TREES, 7 ACCENT TREES, UNABLE TO BE PROVIDED IN BUFFER DUE TO EXISTING ATMOS GAS EASEMENT. 3 CANOPY TREES AND 11 ACCENT TREES PROVIDED BUT LOCATED ELSEWHERE ON PROJECT DUE TO EASEMENT RESTRICTIONS. BERM AND ATMOS APPROVED SHRUBS PROVIDED IN THE REQUIRED 15' LANDSCAPE BUFFER. ADDITIONAL ATMOS APPROVED SHRUBS AND ORNAMENTAL GRASSES PLACED IN ADDITIONAL 20' AREA ADJACENT TO THE REQUIRED BUFFER (TOTAL 35')
EAST PROPERTY LINE BUFFER:	NOT REQUIRED. PROPERTY ZONED PD-10
NORTH PROPERTY LINE BUFFER:	NOT REQUIRED. PROPERTY ZONED LIGHT INDUSTRIAL

05.02 LANDSCAPE SCREENING

REQ. HEADLIGHT SCREENING	NOT APPLICABLE
SCREENING FROM RESIDENTIAL	NOT APPLICABLE

05.03 LANDSCAPE REQUIREMENTS - COMMERCIAL (C) DISTRICT

TOTAL SITE AREA:	±160,353 SF
LANDSCAPE AREA REQUIRED TOTAL SITE:	32,071 SF (20%)
LANDSCAPE PROVIDED, TOTAL SITE:	±60,740 SF (37.9%)
LOCATION OF LANDSCAPING:	MIN. 50% OF REQ. LANDSCAPING SHALL BE LOCATED IN THE FRONT OF & ALONG THE SIDE OF BUILDINGS W/ STREET FRONTAGE.
LANDSCAPE AREAS IN FRONT & SIDES OF BUILDINGS:	±22,316 SF (63.3%)
MIN. SIZE OF AREAS:	ALL REQ. LANDSCAPING SHALL BE NO LESS THAN 5' WIDE AND A MIN. OF 25 SF IN AREA
DETENTION BASIN (XERISCAPE OPTION):	MIN. (1) CANOPY TREE AND (4) SHRUB/ORNAMENTAL GRASS PER 750 SF OF DRY LAND AREA
PROPOSED DETENTION BASIN LANDSCAPING:	10,890 / 750 = 14; 14 x 4 = 56 SHRUBS + NATIVE GRASSES
PARKING LOT LANDSCAPING	MIN. 5% OR 200 SF OF LANDSCAPING, WHICHEVER IS GREATER, IN THE INTERIOR OF PARKING LOT AREA.
PROPOSED PARKING AREA:	±29,004 SF
REQ. PARKING LOT LANDSCAPING:	±1,450 SF (29,004 x 5%) AND (1) LG. CANOPY TREE FOR EVERY 10 PARKING SPACES INTERNAL TO PARKING AREAS (PARKING AREA OVER 20,000 SF) REQ. PARKING SPACES MUST BE WITHIN 80' OF A CANOPY TREE TRUNK
PROPOSED PARKING LOT LANDSCAPING:	±1,764 SF 34 PARKING SPACES / 10 = 3 TREES
TREES PROVIDED:	5 CANOPY TREES

SITE DATA TABLE

EXISTING USE:	VACANT	
PROPOSED USE:	MINI-WAREHOUSE & OFFICE SUITES	
EXISTING ZONING DISTRICT:	PLANNED DEVELOPMENT (PD-10)	
SITE AREA (LOT 2):	3.682 AC (160,388 SF)	
SITE AREA (LOT 3):	2.565 AC (111,719 SF)	
TOTAL SITE AREA:	6.247 AC (272,107 SF)	
FOR LOT 2 ONLY		
BUILDING AREA	MINI-WAREHOUSE	OFFICE SUITES
BUILDING A (3 STORIES):	69,250 SF	4,400 SF
BUILDING B (1 STORY):	11,350 SF	0 SF
BUILDING C (1 STORY):	4,000 SF	0 SF
BUILDING D (1 STORY):	13,100 SF	3,000 SF
TOTAL BUILDING AREA:	105,100 SF	
TOTAL BUILDING FOOTPRINT AREA:	56,000 SF	
TOTAL STORAGE UNITS:	635 UNITS	
	REQUIRED	PROVIDED
MAXIMUM LOT COVERAGE:	96,233 SF (60%)	56,000 SF (35%)
FLOOR TO AREA RATIO:	4:1	0.66:1
MAXIMUM BUILDING HEIGHT:	60 FT	42 FT
LANDSCAPE AREA:	32,078 SF (20%)	58,982 SF (36.8%)
	MINI-WAREHOUSE	OFFICE SUITES
PARKING REQUIRED:	9 STALLS (3 STALLS + 1/100 UNITS)	25 STALLS (1/300 SF)
TOTAL PARKING REQUIRED:	34 STALLS	
TOTAL PARKING PROVIDED:	34 STALLS	
NOTE: PD-10 REQUIRES COMMERCIAL (C) ZONING STANDARDS TO BE FOLLOWED FOR A NON-RESIDENTIAL DEVELOPMENT.		

TREE MITIGATION SUMMARY

TOTAL MITIGATION REQUIRED:	119.75"
MITIGATION PROVIDED BY PLANTING 4" CALIPER TREES (31) TO BE PLANTED ONSITE:	124.0"
MITIGATION PROVIDED BY PURCHASING PRESERVATION CREDITS (20% OF TOTAL):	0"
TOTAL MITIGATION PROVIDED:	124.0"

CONTACT 811 BEFORE YOU DIG
811
SAFE DIGGING PARTNER

APPROVED:
I HEREBY CERTIFY THAT THE ABOVE AND FOREGOING SITE PLAN FOR A DEVELOPMENT IN THE CITY OF ROCKWALL, TEXAS, WAS APPROVED BY THE PLANNING & ZONING COMMISSION OF THE CITY OF ROCKWALL ON THE _____ DAY OF _____, _____

WITNESS OUR HANDS, THIS _____ DAY OF _____, _____

PLANNING & ZONING COMMISSION, CHAIRMAN

DIRECTOR OF PLANNING AND ZONING

MULCHES

AFTER ALL PLANTING IS COMPLETE, CONTRACTOR SHALL INSTALL 3" THICK LAYER OF 1-1/2" SHREDDED WOOD MULCH, NATURAL (UNDYED), IN ALL PLANTING AREAS (EXCEPT FOR TURF AND SEEDED AREAS). CONTRACTOR SHALL SUBMIT SAMPLES OF ALL MULCHES TO LANDSCAPE ARCHITECT AND OWNER FOR APPROVAL PRIOR TO CONSTRUCTION. ABSOLUTELY NO EXPOSED GROUND SHALL BE LEFT SHOWING ANYWHERE ON THE PROJECT AFTER MULCH HAS BEEN INSTALLED (SUBJECT TO THE CONDITIONS AND REQUIREMENTS OF THE "GENERAL GRADING AND PLANTING NOTES" AND SPECIFICATIONS).

ROOT BARRIERS

THE CONTRACTOR SHALL INSTALL ROOT BARRIERS NEAR ALL NEWLY-PLANTED TREES THAT ARE LOCATED WITHIN FIVE (5) FEET OF PAVING OR CURBS. ROOT BARRIERS SHALL BE "CENTURY" OR "DEEP-ROOT" 24" DEEP PANELS (OR EQUAL). BARRIERS SHALL BE LOCATED IMMEDIATELY ADJACENT TO HARDSCAPE. INSTALL PANELS PER MANUFACTURER'S RECOMMENDATIONS. UNDER NO CIRCUMSTANCES SHALL THE CONTRACTOR USE ROOT BARRIERS OF A TYPE THAT COMPLETELY ENCIRCLE THE ROOTBALL.

UTILITY SCREENING NOTE:
GROUND MOUNTED EQUIPMENT AND AIR CONDITIONING UNITS SHALL BE SCREENED UTILIZING PLANTINGS, BERMS, WALLS MATCHING THE MAIN STRUCTURE, OR AN ARCHITECTURAL FEATURE THAT IS INTEGRAL TO THE BUILDING'S DESIGN.

NO.	DATE	REVISION

TEL: 214.295.5775
URBAN STRUCTURE
8140 Walnut Hill Lane, Suite 905
Dallas, Texas 75231
Firm Registration #F-22252
www.urbanstruct.com

REGISTERED LANDSCAPE ARCHITECT
STEPHEN W. SALES
3470
STATE OF TEXAS
02/03/2025

ADVANTAGE STORAGE
1701 STATE HIGHWAY 276
OUT OF THE JAMES M. ALLEN SURVEY, ABSTRACT NO. 2
CITY OF ROCKWALL, ROCKWALL COUNTY, TEXAS

LANDSCAPE PLANTING PLAN

PROJECT:

PREPARED ON:	07/14/2022
CLIENT:	ADVANTAGE STORAGE
DRAWN BY:	LL
DESIGNER:	LL
REVIEWER:	BP
U.S. PROJECT:	23577

SHEET TITLE:

SHEET
LP-1

CITY CASE NO. ######

PLANTING SPECIFICATIONS

GENERAL

A. QUALIFICATIONS OF LANDSCAPE CONTRACTOR
1. ALL LANDSCAPE WORK SHOWN ON THESE PLANS SHALL BE PERFORMED BY A SINGLE FIRM SPECIALIZING IN LANDSCAPE PLANTING.
2. A LIST OF SUCCESSFULLY COMPLETED PROJECTS OF THIS TYPE, SIZE AND NATURE MAY BE REQUESTED BY THE OWNER FOR FURTHER QUALIFICATION MEASURES.
3. THE LANDSCAPE CONTRACTOR SHALL HOLD A VALID NURSERY AND FLORAL CERTIFICATE ISSUED BY THE TEXAS DEPARTMENT OF AGRICULTURE, AS WELL AS OPERATE UNDER A COMMERCIAL PESTICIDE APPLICATOR LICENSE ISSUED BY EITHER THE TEXAS DEPARTMENT OF AGRICULTURE OR THE TEXAS STRUCTURAL PEST CONTROL BOARD.

B. SCOPE OF WORK
1. WORK COVERED BY THESE SECTIONS INCLUDES THE FURNISHING AND PAYMENT OF ALL MATERIALS, LABOR, SERVICES, EQUIPMENT, LICENSES, TAXES AND ANY OTHER ITEMS THAT ARE NECESSARY FOR THE EXECUTION, INSTALLATION AND COMPLETION OF ALL WORK, SPECIFIED HEREIN AND / OR SHOWN ON THE LANDSCAPE PLANS, NOTES, AND DETAILS.
2. ALL WORK SHALL BE PERFORMED IN ACCORDANCE WITH ALL APPLICABLE LAWS, CODES AND REGULATIONS REQUIRED BY AUTHORITIES HAVING JURISDICTION OVER SUCH WORK, INCLUDING ALL INSPECTIONS AND PERMITS REQUIRED BY FEDERAL, STATE AND LOCAL AUTHORITIES IN SUPPLY, TRANSPORTATION AND INSTALLATION OF MATERIALS.
3. THE LANDSCAPE CONTRACTOR SHALL VERIFY THE LOCATION OF ALL UNDERGROUND UTILITY LINES (WATER, SEWER, ELECTRICAL, TELEPHONE, GAS, CABLE, TELEVISION, ETC.) PRIOR TO THE START OF ANY WORK.

PRODUCTS

A. ALL MANUFACTURED PRODUCTS SHALL BE NEW.
B. CONTAINER AND BALLED-AND-BURLAPPED PLANTS:
1. FURNISH NURSERY-GROWN PLANTS COMPLYING WITH ANSI Z60.1-2014. PROVIDE WELL-SHAPED, FULLY BRANCHED, HEALTHY, VIGOROUS STOCK FREE OF DISEASE, INSECTS, EGGS, LARVAE, AND DEFECTS SUCH AS KNOTS, SUN SCALD, INJURIES, ABRASIONS, AND DISFIGUREMENT. ALL PLANTS WITHIN A SPECIES SHALL HAVE SIMILAR SIZE, AND SHALL BE OF A FORM TYPICAL FOR THE SPECIES. ALL TREES SHALL BE OBTAINED FROM SOURCES WITHIN 200 MILES OF THE PROJECT SITE, AND WITH SIMILAR CLIMACTIC CONDITIONS.
2. ROOT SYSTEMS SHALL BE HEALTHY, DENSELY BRANCHED ROOT SYSTEMS, NON-POT-BOUND, FREE FROM ENCIRCLING AND/OR GIRDLING ROOTS, AND FREE FROM ANY OTHER ROOT DEFECTS (SUCH AS J-SHAPED ROOTS).
3. TREES MAY BE PLANTED FROM CONTAINERS OR BALLED-AND-BURLAPPED (B&B), UNLESS SPECIFIED ON THE PLANTING LEGEND. BARE-ROOT TREES ARE NOT ACCEPTABLE.
4. ANY PLANT DEEMED UNACCEPTABLE BY THE LANDSCAPE ARCHITECT OR OWNER SHALL BE IMMEDIATELY REMOVED FROM THE SITE AND SHALL BE REPLACED WITH AN ACCEPTBLE PLANT OF LIKE TYPE AND SIZE AT THE CONTRACTOR'S OWN EXPENSE. ANY PLANTS APPEARING TO BE UNHEALTHY, EVEN IF DETERMINED TO STILL BE ALIVE, SHALL NOT BE ACCEPTED. THE LANDSCAPE ARCHITECT AND OWNER SHALL BE THE SOLE JUDGES AS TO THE ACCEPTABILITY OF PLANT MATERIAL.
5. ALL TREES SHALL BE STANDARD IN FORM, UNLESS OTHERWISE SPECIFIED. TREES WITH CENTRAL LEADERS WILL NOT BE ACCEPTED IF LEADER IS DAMAGED OR REMOVED. PRUNE ALL DAMAGED TWIGS AFTER PLANTING.
6. CALIPER MEASUREMENTS FOR STANDARD (SINGLE TRUNK) TREES SHALL BE AS FOLLOWS: SIX INCHES ABOVE THE ROOT FLARE FOR TREES UP TO AND INCLUDING FOUR INCHES IN CALIPER, AND TWELVE INCHES ABOVE THE ROOT FLARE FOR TREES EXCEEDING FOUR INCHES IN CALIPER.
7. MULTI-TRUNK TREES SHALL BE MEASURED BY THEIR OVERALL HEIGHT, MEASURED FROM THE TOP OF THE ROOT BALL. WHERE CALIPER MEASUREMENTS ARE USED, THE CALIPER SHALL BE CALCULATED AS ONE-HALF OF THE SUM OF THE CALIPER OF THE THREE LARGEST TRUNKS.
8. ANY TREE OR SHRUB SHOWN TO HAVE EXCESS SOIL PLACED ON TOP OF THE ROOT BALL, SO THAT THE ROOT FLARE HAS BEEN COMPLETELY COVERED, SHALL BE REJECTED.

C. SOD: PROVIDE WELL-ROOTED SOD OF THE VARIETY NOTED ON THE PLANS. SOD SHALL BE CUT FROM HEALTHY, MATURE TURF WITH SOIL THICKNESS OF 3/4" TO 1". EACH PALLET OF SOD SHALL BE ACCOMPANIED BY A CERTIFICATE FROM SUPPLIER STATING THE COMPOSITION OF THE SOD.
D. TOPSOIL: SANDY TO CLAY LOAM TOPSOIL, FREE OF STONES LARGER THAN ½ INCH, FOREIGN MATTER, PLANTS, ROOTS, AND SEEDS.
E. COMPOST: WELL-COMPOSTED, STABLE, AND WEED-FREE ORGANIC MATTER, pH RANGE OF 5.5 TO 8; MOISTURE CONTENT 35 TO 55 PERCENT BY WEIGHT; 100 PERCENT PASSING THROUGH 3/4-INCH SIEVE; SOLUBLE SALT CONTENT OF 5 TO 10 DECISIEMENS/M; NOT EXCEEDING 0.5 PERCENT INERT CONTAMINANTS AND FREE OF SUBSTANCES TOXIC TO PLANTINGS. NO MANURE OR ANIMAL-BASED PRODUCTS SHALL BE USED.
F. FERTILIZER: GRANULAR FERTILIZER CONSISTING OF NITROGEN, PHOSPHORUS, POTASSIUM, AND OTHER NUTRIENTS IN PROPORTIONS, AMOUNTS, AND RELEASE RATES RECOMMENDED IN A SOIL REPORT FROM A QUALIFIED SOIL-TESTING AGENCY (SEE BELOW).
G. MULCH: SIZE AND TYPE AS INDICATED ON PLANS, FREE FROM DELETERIOUS MATERIALS AND SUITABLE AS A TOP DRESSING OF TREES AND SHRUBS.
H. TREE STAKING AND GUYING
1. STAKES: 6' LONG GREEN METAL T-POSTS.
2. GUY AND TIE WIRE: ASTM A 641, CLASS 1, GALVANIZED-STEEL WIRE, 2-STRAND, TWISTED, 0.106 INCH DIAMETER.
3. STRAP CHAFING GUARD: REINFORCED NYLON OR CANVAS AT LEAST 1-1/2 INCH WIDE, WITH GROMMETS TO PROTECT TREE TRUNKS FROM DAMAGE.

I. STEEL EDGING: PROFESSIONAL STEEL EDGING, 14 GAUGE THICK X 4 INCHES WIDE, FACTORY PAINTED DARK GREEN. ACCEPTABLE MANUFACTURERS INCLUDE COL-MET OR APPROVED EQUAL.
J. PRE-EMERGENT HERBICIDES: ANY GRANULAR, NON-STAINING PRE-EMERGENT HERBICIDE THAT IS LABELED FOR THE SPECIFIC ORNAMENTALS OR TURF ON WHICH IT WILL BE UTILIZED. PRE-EMERGENT HERBICIDES SHALL BE APPLIED PER THE MANUFACTURER'S LABELED RATES.

METHODS

A. SOIL PREPARATION
1. BEFORE STARTING WORK, THE LANDSCAPE CONTRACTOR SHALL VERIFY THAT THE GRADE OF ALL LANDSCAPE AREAS ARE WITHIN +/-0.1' OF FINISH GRADE. THE CONTRACTOR SHALL NOTIFY THE OWNER IMMEDIATELY SHOULD ANY DISCREPANCIES EXIST.
2. SOIL TESTING:
a. AFTER FINISH GRADES HAVE BEEN ESTABLISHED, CONTRACTOR SHALL HAVE SOIL SAMPLES FROM THE PROJECT'S LANDSCAPE AREAS TESTED BY AN ESTABLISHED SOIL TESTING LABORATORY. EACH SAMPLE SUBMITTED TO THE LAB SHALL CONTAIN NO LESS THAN ONE QUART OF SOIL, TAKEN FROM BETWEEN THE SOIL SURFACE AND 6" DEPTH. IF NO SAMPLE LOCATIONS ARE INDICATED ON THE PLANS, THE CONTRACTOR SHALL TAKE A MINIMUM OF THREE SAMPLES FROM VARIOUS REPRESENTATIVE LOCATIONS FOR TESTING.
b. THE CONTRACTOR SHALL HAVE THE SOIL TESTING LABORATORY PROVIDE RESULTS FOR THE FOLLOWING: SOIL TEXTURAL CLASS, GENERAL SOIL FERTILITY, pH, ORGANIC MATTER CONTENT, SALT (CEC), LIME, SODIUM ADSORPTION RATIO (SAR) AND BORON CONTENT.
c. THE CONTRACTOR SHALL ALSO SUBMIT THE PROJECT'S PLANT LIST TO THE LABORATORY ALONG WITH THE SOIL SAMPLES.
d. THE SOIL REPORT PRODUCED BY THE LABORATORY SHALL CONTAIN RECOMMENDATIONS FOR THE FOLLOWING (AS APPROPRIATE): SEPARATE SOIL PREPARATION AND BACKFILL MIX RECOMMENDATIONS FOR GENERAL ORNAMENTAL PLANTS, XERIC PLANTS, TURF, AND NATIVE SEED, AS WELL AS PRE-PLANT FERTILIZER APPLICATIONS AND RECOMMENDATIONS FOR ANY OTHER SOIL RELATED ISSUES. THE REPORT SHALL ALSO PROVIDE A FERTILIZER PROGRAM FOR THE ESTABLISHMENT PERIOD AND FOR LONG-TERM MAINTENANCE.
3. THE CONTRACTOR SHALL INSTALL SOIL AMENDMENTS AND FERTILIZERS PER THE SOILS REPORT RECOMMENDATIONS. ANY CHANGE IN COST DUE TO THE SOIL REPORT RECOMMENDATIONS, EITHER INCREASE OR DECREASE, SHALL BE SUBMITTED TO THE OWNER WITH THE REPORT.
4. FOR BIDDING PURPOSES ONLY, THE SOIL PREPARATION SHALL CONSIST OF THE FOLLOWING:
a. TURF: INCORPORATE THE FOLLOWING AMENDMENTS INTO THE TOP 8" OF SOIL BY MEANS OF ROTOTILLING AFTER CROSS-RIPPING:
i. NITROGEN STABILIZED ORGANIC AMENDMENT - 4 CU. YDS. PER 1,000 S.F.
ii. PREPLANT TURF FERTILIZER (10-20-10 OR SIMILAR, SLOW RELEASE, ORGANIC) - 15 LBS PER 1,000 S.F.
iii. "CLAY BUSTER" OR EQUAL - USE MANUFACTURER'S RECOMMENDED RATE
b. TREES, SHRUBS, AND PERENNIALS: INCORPORATE THE FOLLOWING AMENDMENTS INTO THE TOP 8" OF SOIL BY MEANS OF ROTOTILLING AFTER CROSS-RIPPING:
i. NITROGEN STABILIZED ORGANIC AMENDMENT - 4 CU. YDS. PER 1,000 S.F.
ii. 12-12-12 FERTILIZER (OR SIMILAR, ORGANIC, SLOW RELEASE) - 10 LBS. PER CU. YD.
iii. "CLAY BUSTER" OR EQUAL - USE MANUFACTURER'S RECOMMENDED RATE
iv. IRON SULPHATE - 2 LBS. PER CU. YD.
5. IN THE CONTEXT OF THESE PLANS, NOTES, AND SPECIFICATIONS, "FINISH GRADE" REFERS TO THE FINAL ELEVATION OF THE SOIL SURFACE (NOT TOP OF MULCH) AS INDICATED ON THE GRADING PLANS.
a. BEFORE STARTING WORK, THE LANDSCAPE CONTRACTOR SHALL VERIFY THAT THE ROUGH GRADES OF ALL LANDSCAPE AREAS ARE WITHIN +/-0.1' OF FINISH GRADE. SEE SPECIFICATIONS FOR MORE DETAILED INSTRUCTION ON TURF AREA AND PLANTING BED PREPARATION.
b. CONSTRUCT AND MAINTAIN FINISH GRADES AS SHOWN ON GRADING PLANS, AND CONSTRUCT AND MAINTAIN SLOPES AS RECOMMENDED BY THE GEOTECHNICAL REPORT. ALL LANDSCAPE AREAS SHALL HAVE POSITIVE DRAINAGE AWAY FROM STRUCTURES AT THE MINIMUM SLOPE SPECIFIED IN THE REPORT AND ON THE GRADING PLANS, AND AREAS OF POTENTIAL PONDING SHALL BE REGRADED TO BLEND IN WITH THE SURROUNDING GRADES AND ELIMINATE PONDING POTENTIAL.
c. THE LANDSCAPE CONTRACTOR SHALL DETERMINE WHETHER OR NOT THE EXPORT OF ANY SOIL WILL BE NEEDED, TAKING INTO ACCOUNT THE ROUGH GRADE PROVIDED, THE AMOUNT OF SOIL AMENDMENTS TO BE ADDED (**BASED ON A SOIL TEST**, PER SPECIFICATIONS), AND THE FINISH GRADES TO BE ESTABLISHED.
d. ENSURE THAT THE FINISH GRADE IN SHRUB AREAS IMMEDIATELY ADJACENT TO WALKS AND OTHER WALKING SURFACES, AFTER INSTALLING SOIL AMENDMENTS, IS 3" BELOW THE ADJACENT FINISH SURFACE, IN ORDER TO ALLOW FOR PROPER MULCH DEPTH. TAPER THE SOIL SURFACE TO MEET FINISH GRADE, AS SPECIFIED ON THE GRADING PLANS, AT APPROXIMATELY 18" AWAY FROM THE WALKS.
e. ENSURE THAT THE FINISH GRADE IN TURF AREAS IMMEDIATELY ADJACENT TO WALKS AND OTHER WALKING SURFACES, AFTER INSTALLING SOIL AMENDMENTS, IS 1" BELOW THE FINISH SURFACE OF THE WALKS. TAPER THE SOIL SURFACE TO MEET FINISH GRADE, AS SPECIFIED ON THE GRADING PLANS, AT APPROXIMATELY 18" AWAY FROM THE WALKS.
f. SHOULD ANY CONFLICTS AND/OR DISCREPANCIES ARISE BETWEEN THE GRADING PLANS, GEOTECHNICAL REPORT, THESE NOTES AND PLANS, AND ACTUAL CONDITIONS, THE CONTRACTOR SHALL IMMEDIATELY BRING SUCH ITEMS TO THE ATTENTION OF THE LANDSCAPE ARCHITECT, GENERAL CONTRACTOR, AND OWNER.
6. ONCE SOIL PREPARATION IS COMPLETE, THE LANDSCAPE CONTRACTOR SHALL ENSURE THAT THERE ARE NO DEBRIS, TRASH, OR STONES LARGER THAN 1" REMAINING IN THE TOP 6" OF SOIL.

B. SUBMITTALS
1. THE CONTRACTOR SHALL PROVIDE SUBMITTALS AND SAMPLES, IF REQUIRED, TO THE LANDSCAPE ARCHITECT, AND RECEIVE APPROVAL IN WRITING FOR SUCH SUBMITTALS BEFORE WORK COMMENCES.
2. SUBMITTALS SHALL INCLUDE PHOTOS OF PLANTS WITH A RULER OR MEASURING STICK FOR SCALE, PHOTOS OR SAMPLES OF ANY REQUIRED MULCHES, AND SOIL TEST RESULTS AND PREPARATION RECOMMENDATIONS FROM THE TESTING LAB (INCLUDING COMPOST AND FERTILIZER RATES AND TYPES, AND OTHER AMENDMENTS FOR TREE/SHRUB, TURF, AND SEED AREAS AS MAY BE APPROPRIATE).
3. SUBMITTALS SHALL ALSO INCLUDE MANUFACTURER CUT SHEETS FOR PLANTING ACCESSORIES SUCH AS TREE STAKES AND TIES, EDGING, AND LANDSCAPE FABRICS (IF ANY).
4. WHERE MULTIPLE ITEMS ARE SHOWN ON A PAGE, THE CONTRACTOR SHALL CLEARLY INDICATE THE ITEM BEING CONSIDERED.

C. GENERAL PLANTING
1. REMOVE ALL NURSERY TAGS AND STAKES FROM PLANTS.
2. EXCEPT IN AREAS TO BE PLANTED WITH ORNAMENTAL GRASSES, APPLY PRE-EMERGENT HERBICIDES AT THE MANUFACTURER'S RECOMMENDED RATE.
3. TRENCHING NEAR EXISTING TREES:
a. CONTRACTOR SHALL NOT DISTURB ROOTS 1-1/2" AND LARGER IN DIAMETER WITHIN THE CRITICAL ROOT ZONE (CRZ) OF EXISTING TREES, AND SHALL EXERCISE ALL POSSIBLE CARE AND PRECAUTIONS TO AVOID INJURY TO TREE ROOTS, TRUNKS, AND BRANCHES. THE CRZ IS DEFINED AS A CIRCULAR AREA EXTENDING OUTWARD FROM THE TREE TRUNK, WITH A RADIUS EQUAL TO 1' FOR EVERY 1" OF TRUNK DIAMETER-AT-BREAST-HEIGHT (4.5' ABOVE THE AVERAGE GRADE AT THE TRUNK).
b. ALL EXCAVATION WITHIN THE CRZ SHALL BE PERFORMED USING HAND TOOLS. NO MACHINE EXCAVATION OR TRENCHING OF ANY KIND SHALL BE ALLOWED WITHIN THE CRZ.
c. ALTER ALIGNMENT OF PIPE TO AVOID TREE ROOTS 1-1/2" AND LARGER IN DIAMETER. WHERE TREE ROOTS 1-1/2" AND LARGER IN DIAMETER ARE ENCOUNTERED IN THE FIELD, TUNNEL UNDER SUCH ROOTS. WRAP EXPOSED ROOTS WITH SEVERAL LAYERS OF BURLAP AND KEEP MOIST. CLOSE ALL TRENCHES WITHIN THE CANOPY DRIP LINES WITHIN 24 HOURS.
d. ALL SEVERED ROOTS SHALL BE HAND PRUNED WITH SHARP TOOLS AND ALLOWED TO AIR-DRY. DO NOT USE ANY SORT OF SEALERS OR WOUND PAINTS.

D. TREE PLANTING
1. TREE PLANTING HOLES SHALL BE EXCAVATED TO MINIMUM WIDTH OF TWO TIMES THE WIDTH OF THE ROOTBALL, AND TO A DEPTH EQUAL TO THE DEPTH OF THE ROOTBALL LESS TWO TO FOUR INCHES.
2. SCARIFY THE SIDES AND BOTTOM OF THE PLANTING HOLE PRIOR TO THE PLACEMENT OF THE TREE. REMOVE ANY GLAZING THAT MAY HAVE BEEN CAUSED DURING THE EXCAVATION OF THE HOLE.
3. FOR CONTAINER AND BOX TREES, TO REMOVE ANY POTENTIALLY GIRDLING ROOTS AND OTHER ROOT DEFECTS, THE CONTRACTOR SHALL SHAVE A 1" LAYER OFF OF THE SIDES AND BOTTOM OF THE ROOTBALL OF ALL TREES JUST BEFORE PLACING INTO THE PLANTING PIT. DO NOT "TEASE" ROOTS OUT FROM THE ROOTBALL.
4. INSTALL THE TREE ON UNDISTURBED SUBGRADE SO THAT THE TOP OF THE ROOTBALL IS TWO TO FOUR INCHES ABOVE THE SURROUNDING GRADE.
5. BACKFILL THE TREE HOLE UTILIZING THE EXISTING TOPSOIL FROM ON-SITE. ROCKS LARGER THAN 1" DIA. AND ALL OTHER DEBRIS SHALL BE REMOVED FROM THE SOIL PRIOR TO THE BACKFILL. SHOULD ADDITIONAL SOIL BE REQUIRED TO ACCOMPLISH THIS TASK, USE STORED TOPSOIL FROM ON-SITE OR IMPORT ADDITIONAL TOPSOIL FROM OFF-SITE AT NO ADDITIONAL COST TO THE OWNER. IMPORTED TOPSOIL SHALL BE OF SIMILAR TEXTURAL CLASS AND COMPOSITION IN THE ON-SITE SOIL.
6. TREES SHALL NOT BE STAKED UNLESS LOCAL CONDITIONS (SUCH AS HEAVY WINDS OR SLOPES) REQUIRE STAKES TO KEEP TREES UPRIGHT. SHOULD STAKING BE REQUIRED, THE TOTAL NUMBER OF TREE STAKES (BEYOND THE MINIMUMS LISTED BELOW) WILL BE LEFT TO THE LANDSCAPE CONTRACTOR'S DISCRETION. SHOULD ANY TREES FALL OR LEAN, THE LANDSCAPE CONTRACTOR SHALL STRAIGHTEN THE TREE, OR REPLACE IT SHOULD IT BECOME DAMAGED. TREE STAKING SHALL ADHERE TO THE FOLLOWING GUIDELINES:
a. 1"-2" TREES — TWO STAKES PER TREE
b. 2-1/2"-4" TREES — THREE STAKES PER TREE
c. TREES OVER 4" CALIPER — GUY AS NEEDED
d. MULTI-TRUNK TREES — THREE STAKES PER TREE MINIMUM, QUANTITY AND POSITIONS AS NEEDED TO STABILIZE THE TREE
e. MULTI-TRUNK TREES — THREE STAKES PER TREE MINIMUM, QUANTITY AND POSITIONS AS NEEDED TO STABILIZE THE TREE
7. UPON COMPLETION OF PLANTING, CONSTRUCT AN EARTH WATERING BASIN AROUND THE TREE. COVER THE INTERIOR OF THE TREE RING WITH THE WEED BARRIER CLOTH AND TOPDRESS WITH MULCH (TYPE AND DEPTH PER PLANS).

E. SHRUB, PERENNIAL, AND GROUNDCOVER PLANTING
1. DIG THE PLANTING HOLES TWICE AS WIDE AND 2" LESS DEEP THAN EACH PLANT'S ROOTBALL. INSTALL THE PLANT IN THE HOLE. BACKFILL AROUND THE PLANT WITH SOIL AMENDED PER SOIL TEST RECOMMENDATIONS.
2. INSTALL THE WEED BARRIER CLOTH, OVERLAPPING IT AT THE ENDS. UTILIZE STEEL STAPLES TO KEEP THE WEED BARRIER CLOTH IN PLACE.
3. WHEN PLANTING IS COMPLETE, INSTALL MULCH (TYPE AND DEPTH PER PLANS) OVER ALL PLANTING BEDS, COVERING THE ENTIRE PLANTING AREA.

F. SODDING
1. SOD VARIETY TO BE AS SPECIFIED ON THE LANDSCAPE PLAN.
2. LAY SOD WITHIN 24 HOURS FROM THE TIME OF STRIPPING. DO NOT LAY IF THE GROUND IS FROZEN.
3. LAY THE SOD TO FORM A SOLID MASS WITH TIGHTLY FITTED JOINTS. BUTT ENDS AND SIDES OF SOD STRIPS - DO NOT OVERLAP. STAGGER STRIPS TO OFFSET JOINTS IN ADJACENT COURSES.
4. ROLL THE SOD TO ENSURE GOOD CONTACT OF THE SOD'S ROOT SYSTEM WITH THE SOIL UNDERNEATH.
5. WATER THE SOD THOROUGHLY WITH A FINE SPRAY IMMEDIATELY AFTER PLANTING TO OBTAIN AT LEAST SIX INCHES OF PENETRATION INTO THE SOIL BELOW THE SOD.

G. MULCH
1. INSTALL MULCH TOPDRESSING, TYPE AND DEPTH PER MULCH NOTE, IN ALL PLANTING AREAS AND TREE RINGS.
2. DO NOT INSTALL MULCH WITHIN 6" OF TREE ROOT FLARE AND WITHIN 24" OF HABITABLE STRUCTURES, EXCEPT AS MAY BE NOTED ON THESE PLANS. MULCH COVER WITHIN 6" OF CONCRETE WALKS AND CURBS SHALL NOT PROTRUDE ABOVE THE FINISH SURFACE OF THE WALKS AND CURBS. MULCH COVER WITHIN 12" OF WALLS SHALL BE AT LEAST 3" LOWER THAN THE TOP OF WALL.

H. CLEAN UP
1. DURING LANDSCAPE PREPARATION AND PLANTING, KEEP ALL PAVEMENT CLEAN AND ALL WORK AREAS IN A NEAT, ORDERLY CONDITION.
2. DISPOSED LEGALLY OF ALL EXCAVATED MATERIALS OFF THE PROJECT SITE.

I. INSPECTION AND ACCEPTANCE
1. UPON COMPLETION OF THE WORK, THE LANDSCAPE CONTRACTOR SHALL PROVIDE THE SITE CLEAN, FREE OF DEBRIS AND TRASH, AND SUITABLE FOR USE AS INTENDED. THE LANDSCAPE CONTRACTOR SHALL THEN REQUEST AN INSPECTION BY THE OWNER TO DETERMINE FINAL ACCEPTABILITY.
2. WHEN THE INSPECTED PLANTING WORK DOES NOT COMPLY WITH THE CONTRACT DOCUMENTS, THE LANDSCAPE CONTRACTOR SHALL REPLACE AND/OR REPAIR THE REJECTED WORK TO THE OWNER'S SATISFACTION WITHIN 24 HOURS.
3. THE LANDSCAPE MAINTENANCE PERIOD WILL NOT COMMENCE UNTIL THE LANDSCAPE WORK HAS BEEN RE-INSPECTED BY THE OWNER AND FOUND TO BE ACCEPTABLE. AT THAT TIME, A WRITTEN NOTICE OF FINAL ACCEPTANCE WILL BE ISSUED BY THE OWNER, AND THE MAINTENANCE AND GUARANTEE PERIODS WILL COMMENCE.

J. LANDSCAPE MAINTENANCE
1. THE LANDSCAPE CONTRACTOR SHALL BE RESPONSIBLE FOR THE MAINTENANCE OF ALL WORK SHOWN ON THESE PLANS FOR 90 DAYS BEYOND FINAL ACCEPTANCE OF ALL LANDSCAPE WORK BY THE OWNER. LANDSCAPE MAINTENANCE SHALL INCLUDE WEEKLY SITE VISITS FOR THE FOLLOWING ACTIONS (AS APPROPRIATE): PROPER PRUNING, RESTAKING OF TREES, RESETTING OF PLANTS THAT HAVE SETTLED, MOWING AND AERATION OF LAWNS, WEEDING, TREATING FOR INSECTS AND DISEASES,REPLACEMENT OF MULCH, REMOVAL OF LITTER, REPAIRS TO THE IRRIGATION SYSTEM DUE TO FAULTY PARTS AND/OR WORKMANSHIP, AND THE APPROPRIATE WATERING OF ALL PLANTINGS. THE LANDSCAPE CONTRACTOR SHALL MAINTAIN THE IRRIGATION SYSTEM IN PROPER WORKING ORDER, WITH SCHEDULING ADJUSTMENTS BY SEASON TO MAXIMIZE WATER CONSERVATION.
2. SHOULD SEEDED AND/OR SODDED AREAS NOT BE COVERED BY AN AUTOMATIC IRRIGATION SYSTEM, THE LANDSCAPE CONTRACTOR SHALL BE RESPONSIBLE FOR WATERING THESE AREAS AND OBTAINING A FULL, HEALTHY STAND OF PLANTS AT NO ADDITIONAL COST TO THE OWNER.
3. TO ACHIEVE FINAL ACCEPTANCE AT THE END OF THE MAINTENANCE PERIOD, ALL OF THE FOLLOWING CONDITIONS MUST OCCUR:
a. THE LANDSCAPE SHALL SHOW ACTIVE, HEALTHY GROWTH (WITH EXCEPTIONS MADE FOR SEASONAL DORMANCY). ALL PLANTS NOT MEETING THIS CONDITION SHALL BE REJECTED AND REPLACED BY HEALTHY PLANT MATERIAL PRIOR TO FINAL ACCEPTANCE.
b. ALL HARDSCAPE SHALL BE CLEANED PRIOR TO FINAL ACCEPTANCE.
c. SODDED AREAS MUST BE ACTIVELY GROWING AND MUST REACH A MINIMUM HEIGHT OF 1 1/2 INCHES BEFORE FIRST MOWING. BARE AREAS LARGER THAN TWELVE SQUARE INCHES MUST BE RESODDED (AS APPROPRIATE) PRIOR TO FINAL ACCEPTANCE. ALL SODDED TURF SHALL BE NEATLY MOWED.

K. WARRANTY PERIOD, PLANT GUARANTEE AND REPLACEMENTS
1. THE LANDSCAPE CONTRACTOR SHALL GUARANTEE ALL TREES, SHRUBS, PERENNIALS, SOD, AND IRRIGATION SYSTEMS FOR A PERIOD OF ONE YEAR FROM THE DATE OF THE OWNER'S FINAL ACCEPTANCE (90 DAYS FOR ANNUAL PLANTS). THE CONTRACTOR SHALL REPLACE, AT HIS OWN EXPENSE AND TO THE SATISFACTION OF THE OWNER, ANY PLANTS WHICH DIE IN THAT TIME, OR REPAIR ANY PORTIONS OF THE IRRIGATION SYSTEM WHICH OPERATE IMPROPERLY.
2. AFTER THE INITIAL MAINTENANCE PERIOD AND DURING THE GUARANTEE PERIOD, THE LANDSCAPE CONTRACTOR SHALL ONLY BE RESPONSIBLE FOR REPLACEMENT OF PLANTS WHEN PLANT DEATH CANNOT BE ATTRIBUTED DIRECTLY TO OVERWATERING OR OTHER DAMAGE BY HUMAN ACTIONS.

L. PROVIDE A MINIMUM OF (2) COPIES OF RECORD DRAWINGS TO THE OWNER UPON COMPLETION OF WORK. A RECORD DRAWING IS A RECORD OF ALL CHANGES THAT OCCURRED IN THE FIELD AND THAT ARE DOCUMENTED THROUGH CHANGE ORDERS, ADDENDA, OR CONTRACTOR/CONSULTANT DRAWING MARKUPS.

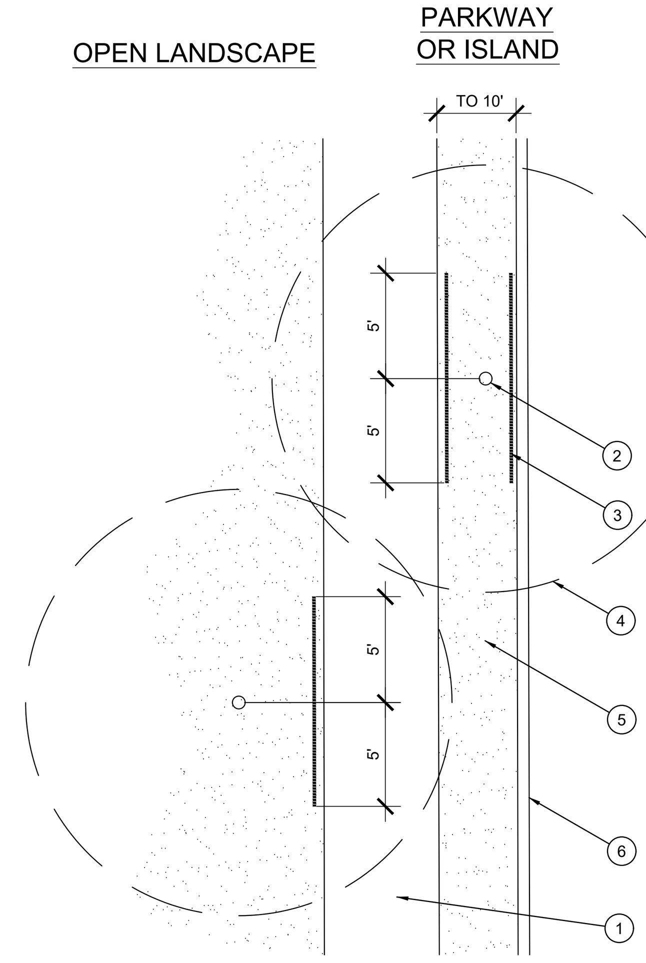

1. TYPICAL WALKWAY OR PAVING
2. TREE TRUNK
3. LINEAR ROOT BARRIER MATERIAL. SEE PLANTING NOTES FOR TYPE AND MANUFACTURER. INSTALL PER MANUFACTURER'S SPECIFICATIONS.
4. TREE CANOPY
5. TYPICAL PLANTING AREA
6. TYPICAL CURB AND GUTTER

NOTES:
1) INSTALL ROOT BARRIERS NEAR ALL NEWLY-PLANTED TREES THAT ARE LOCATED WITHIN FIVE (5) FEET OF PAVING OR CURBS.
2) BARRIERS SHALL BE LOCATED IMMEDIATELY ADJACENT TO HARDSCAPE. UNDER NO CIRCUMSTANCES SHALL THE CONTRACTOR USE ROOT BARRIERS OF A TYPE THAT COMPLETELY ENCIRCLE THE ROOTBALL.

D — ROOT BARRIER - PLAN VIEW
SCALE: NOT TO SCALE

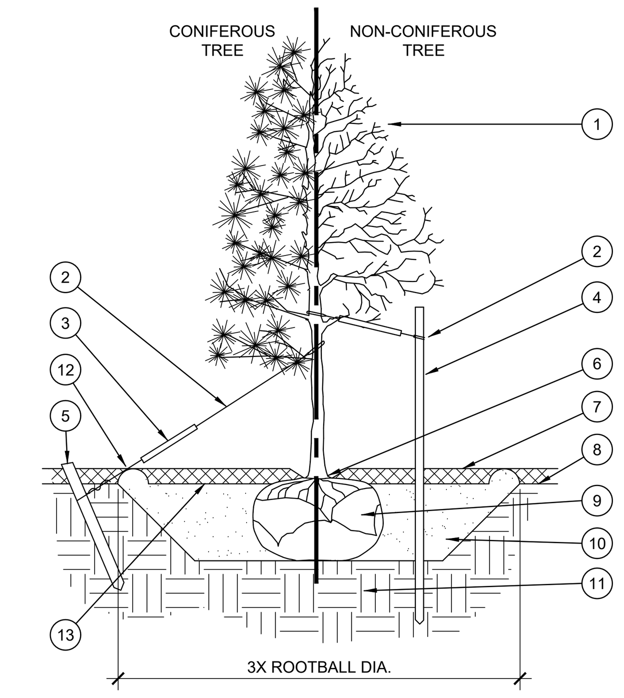

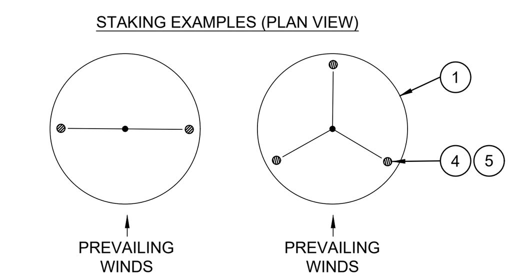

1. TREE CANOPY.
2. CINCH-TIES (24" BOX/2" CAL. TREES AND SMALLER) OR 12 GAUGE GALVANIZED WIRE WITH NYLON TREE STRAPS AT TREE AND STAKE (36" BOX/2.5" CAL. TREES AND LARGER). SECURE TIES OR STRAPS TO TRUNK JUST ABOVE LOWEST MAJOR BRANCHES.
3. 24" X 3/4" P.V.C. MARKERS OVER WIRES.
4. GREEN STEEL T-POSTS. EXTEND POSTS 12" MIN. INTO UNDISTURBED SOIL.
5. PRESSURE-TREATED WOOD DEADMAN, TWO PER TREE (MIN.). BURY OUTSIDE OF PLANTING PIT AND 18" MIN. INTO UNDISTURBED SOIL.
6. TRUNK FLARE.
7. MULCH, TYPE AND DEPTH PER PLANS. DO NOT PLACE MULCH WITHIN 6" OF TRUNK.
8. FINISH GRADE.
9. ROOT BALL.
10. BACKFILL. AMEND AND FERTILIZE ONLY AS RECOMMENDED IN SOIL FERTILITY ANALYSIS.
11. UNDISTURBED NATIVE SOIL.
12. 4" HIGH EARTHEN WATERING BASIN.
13. FINISH GRADE.

NOTES:
1. SCARIFY SIDES OF PLANTING PIT PRIOR TO SETTING TREE.
2. REMOVE EXCESS SOIL APPLIED ON TOP OF THE ROOTBALL THAT COVERS THE ROOT FLARE. THE PLANTING HOLE DEPTH SHALL BE SUCH THAT THE ROOTBALL RESTS ON UNDISTURBED SOIL, AND THE ROOT FLARE IS 2"-4" ABOVE FINISH GRADE.
3. FOR B&B TREES, CUT OFF BOTTOM 1/3 OF WIRE BASKET BEFORE PLACING TREE IN HOLE, CUT OFF AND REMOVE REMAINDER OF BASKET AFTER TREE IS SET IN HOLE, REMOVE ALL NYLON TIES, TWINE, ROPE, AND OTHER PACKING MATERIAL. REMOVE AS MUCH BURLAP FROM AROUND ROOTBALL AS IS PRACTICAL.
4. REMOVE ALL NURSERY STAKES AFTER PLANTING.
5. FOR TREES 36" BOX/2.5" CAL. AND LARGER, USE THREE STAKES OR DEADMEN (AS APPROPRIATE), SPACED EVENLY AROUND TREE.
6. STAKING SHALL BE TIGHT ENOUGH TO PREVENT TRUNK FROM BENDING, BUT LOOSE ENOUGH TO ALLOW SOME TRUNK MOVEMENT IN WIND.

A — TREE PLANTING
SCALE: NOT TO SCALE

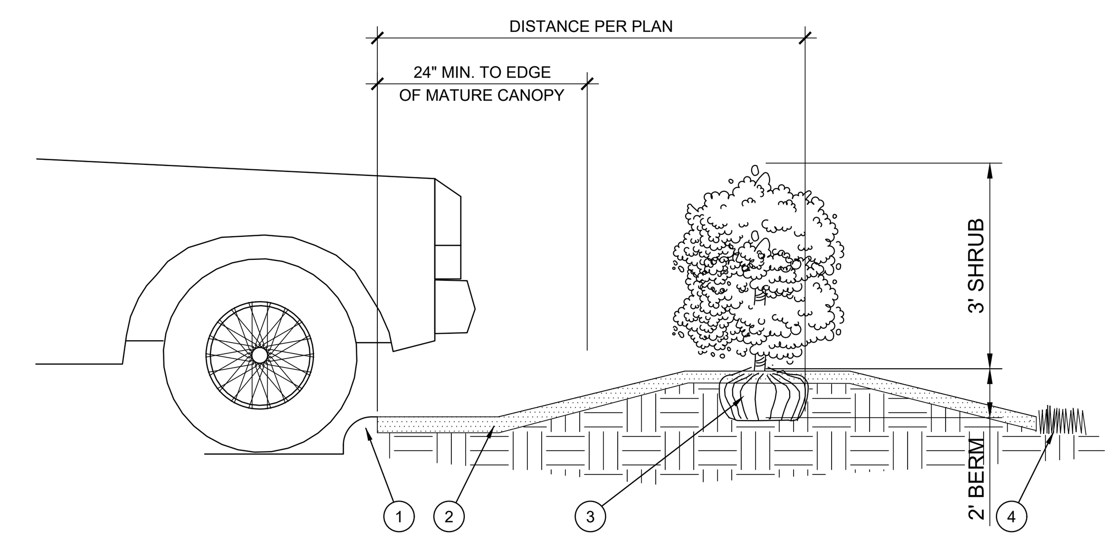

1. CURB.
2. MULCH LAYER.
3. PLANT.
4. TURF (WHERE SHOWN ON PLAN).

E — PLANTING AT PARKING AREA
SCALE: NOT TO SCALE

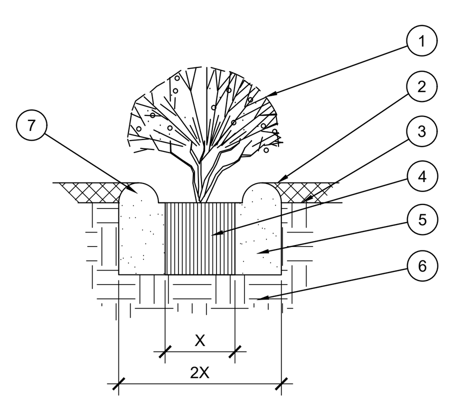

1. SHRUB, PERENNIAL, OR ORNAMENTAL GRASS.
2. MULCH, TYPE AND DEPTH PER PLANS. PLACE NO MORE THAN 1" OF MULCH WITHIN 6" OF PLANT CENTER.
3. FINISH GRADE.
4. ROOT BALL.
5. BACKFILL. AMEND AND FERTILIZE ONLY AS RECOMMENDED IN SOIL FERTILITY ANALYSIS.
6. UNDISTURBED NATIVE SOIL.
7. 3" HIGH EARTHEN WATERING BASIN.

B — SHRUB AND PERENNIAL PLANTING
SCALE: NTS

IRRIGATION CONCEPT

1. AN AUTOMATIC IRRIGATION SYSTEM SHALL BE INSTALLED AND OPERATIONAL BY THE TIME OF FINAL INSPECTION. THE ENTIRE IRRIGATION SYSTEM SHALL BE INSTALLED BY A LICENSED AND QUALIFIED IRRIGATION CONTRACTOR.
2. THE IRRIGATION SYSTEM WILL OPERATE ON POTABLE WATER, AND THE SYSTEM WILL HAVE APPROPRIATE BACKFLOW PREVENTION DEVICES INSTALLED TO PREVENT CONTAMINATION OF THE POTABLE SOURCE.
3. ALL NON-TURF PLANTED AREAS SHALL BE DRIP IRRIGATED. SODDED AND SEEDED AREAS SHALL BE IRRIGATED WITH SPRAY OR ROTOR HEADS AT 100% HEAD-TO-HEAD COVERAGE.
4. ALL PLANTS SHARING SIMILAR HYDROZONE CHARACTERISTICS SHALL BE PLACED ON A VALVE DEDICATED TO PROVIDE THE NECESSARY WATER REQUIREMENTS SPECIFIC TO THAT HYDROZONE.
5. THE IRRIGATION SYSTEM SHALL BE DESIGNED AND INSTALLED, TO THE MAXIMUM EXTENT POSSIBLE, TO CONSERVE WATER BY USING THE FOLLOWING DEVICES AND SYSTEMS: MATCHED PRECIPITATION RATE TECHNOLOGY ON ROTOR AND SPRAY HEADS (WHEREVER POSSIBLE), RAIN SENSORS, AND MULTI-PROGRAM COMPUTERIZED IRRIGATION CONTROLLERS FEATURING SENSORY INPUT CAPABILITIES.
6. ALL IRRIGATION SHALL MEET THE REQUIREMENTS OF THE CITY OF ROCKWALL'S UDC (SUBSECTION 05.04, OF ARTICLE 08)

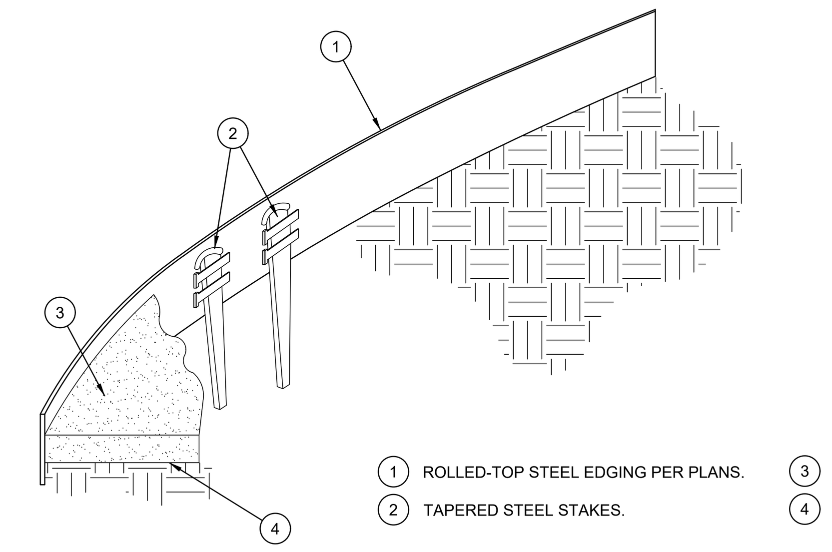

1. ROLLED-TOP STEEL EDGING PER PLANS.
2. TAPERED STEEL STAKES.
3. MULCH, TYPE AND DEPTH PER PLANS.
4. FINISH GRADE.

NOTES:
1) INSTALL EDGING SO THAT STAKES WILL BE ON INSIDE OF PLANTING BED.
2) BOTTOM OF EDGING SHALL BE BURIED A MINIMUM OF 1" BELOW FINISH GRADE.
3) TOP OF MULCH SHALL BE 1" LOWER THAN TOP OF EDGING.

C — STEEL EDGING
SCALE: NOT TO SCALE

APPROVED:
I HEREBY CERTIFY THAT THE ABOVE AND FOREGOING SITE PLAN FOR A DEVELOPMENT IN THE CITY OF ROCKWALL, TEXAS, WAS APPROVED BY THE PLANNING & ZONING COMMISSION OF THE CITY OF ROCKWALL ON THE ______ DAY OF ________, _________

WITNESS OUR HANDS, THIS ______ DAY OF __________, ________

PLANNING & ZONING COMMISSION, CHAIRMAN

DIRECTOR OF PLANNING AND ZONING

National Presence. Local Expertise.
EVERGREEN DESIGN GROUP
800.680.6630
www.evergreendesigngroup.com
LANDSCAPE ARCHITECTURE
LAND PLANNING · IRRIGATION DESIGN

REVISION | DATE | NO.

TEL: 214.295.5775
www.urbanstruct.com
URBAN STRUCTURE
8140 Walnut Hill Lane, Suite 905
Dallas, Texas 75231
Firm Registration #F-22252

REGISTERED LANDSCAPE ARCHITECT — STEPHEN W. SALES — 3470 — STATE OF TEXAS
02/03/2025

PROJECT:
ADVANTAGE STORAGE
1701 STATE HIGHWAY 276
OUT OF THE JAMES M. ALLEN SURVEY, ABSTRACT NO. 2
CITY OF ROCKWALL, ROCKWALL COUNTY, TEXAS

SHEET TITLE:
PLANTING DETAILS & SPECS

PREPARED ON: 07/14/2022
CLIENT: ADVANTAGE STORAGE
DRAWN BY: LL
DESIGNER: LL
REVIEWER: BP
U.S. PROJECT: 22577

SHEET
LP-2

CITY CASE NO. ######

FILE NAME: ADVANTAGE STORAGE-ROCKWALL LP_2025-02-04.DWG
FILE LOCATION: P:\Shared\Projects\2022\Advantage Storage - Rockwall TX\Advantage Storage-Rockwall LP_2025-02-04.dwg
LAST MODIFIED ON: 2/4/2025 11:41 AM
PLOTTED ON: 2/4/2025 11:42 AM

Atmos Energy Approved Vegetation

The following plants are allowed on Atmos Energy's right of way. These plants have less than 4' growth potential and a non-intrusive root system. They are also local to the North Texas climate.

Shrub

Agave
American BeautyBerry
Barberry
Cast Iron Plant
Color Guard Yucca
Compact Nandina
Drift Rose
Dwarf Boxwood
Dwarf Chinese Holly
Dwarf Indian Hawthorn
Dwarf Spiera
Dwarf Variegated
Dwarf Yaupon Holly
Flirt Nandina
Harbor Dwarf Nandina
Miniature Crape Myrtle
Rose Creek Abelia
Rosemary
Spreading Yew
Variegated Abelia
Wheeler's Dwarf

Perennial

Autumn Salvia
Black-Eyed-Susan
Blackfoot Daisy
Blue Mealy Sage
Calylophus
Cone Flower
Creeping Lantana
Daylily
Dwarf Mexican Petunia
Flame Acanthus
Garden Phlox
Gaura
Holly Fern
Lamb's Ear
Wood Fern

Ornamental Grass

Berkeley's Sedge
Gulf Muhly
Hameln's Fountain
Mexican Feather

Groundcover

Ajuga
Asian Jasmine
Creeping Juniper
Creeping Rosemary
Lirope, regular or giant
Mondo Grass
Purple Euonymus

Customer Service: 888.286.6700
atmosenergy.com/pipelinerenewal

Rose Creek Abelia

Dwarf Yaupon Holly

Daylily

Harbor Dwarf Nandina

Lily Turf

Black-Eyed Susan

Dwarf Spirea

Mexican Feather grass

Greggs Salvia

PAVEMENT LEGEND

- EXISTING PAVEMENT
- HEAVY DUTY CONCRETE PAVEMENT
- LIGHT DUTY CONCRETE PAVEMENT

ITE TRIP GENERATION TOTAL=
$105{,}416/_{1000}$ X 0.17 = 18 TRIPS/DAY PEAK HOUR

SITE DATA TABLE

EXISTING USE:	VACANT	
PROPOSED USE:	MINI-WAREHOUSE & OFFICE SUITES	
EXISTING ZONING DISTRICT:	PLANNED DEVELOPMENT (PD-10)	
SITE AREA (LOT 2):	3.682 AC (160,388 SF)	
SITE AREA (LOT 3):	2.565 AC (111,719 SF)	
TOTAL SITE AREA:	6.247 AC (272,107 SF)	
FOR LOT 2 ONLY		
BUILDING AREA	MINI-WAREHOUSE	OFFICE SUITES
BUILDING A (3 STORIES):	73,408 SF	4,400 SF
BUILDING B (1 STORY):	11,350 SF	0 SF
BUILDING C (1 STORY):	5,500 SF	0 SF
BUILDING D (1 STORY):	15,534 SF	2,961 SF
TOTAL BUILDING AREA:	105,792 SF	
TOTAL BUILDING FOOTPRINT AREA:	56,582 SF	
TOTAL STORAGE UNITS:	635 UNITS	
	REQUIRED	PROVIDED
MAXIMUM LOT COVERAGE:	96,233 SF (60%)	56,500 SF (35%)
FLOOR TO AREA RATIO:	4:1	0.66:1
MAXIMUM BUILDING HEIGHT:	60 FT	42 FT
LANDSCAPE AREA:	32,078 SF (20%)	58,982 SF (36.8%)
	MINI-WAREHOUSE	OFFICE SUITES
PARKING REQUIRED:	9 STALLS (3 STALLS + 1/100 UNITS)	25 STALLS (1/300 SF)
TOTAL PARKING REQUIRED:	34 STALLS	
TOTAL PARKING PROVIDED:	34 STALLS	

NOTE: PD-10 REQUIRES COMMERCIAL (C) ZONING STANDARDS TO BE FOLLOWED FOR A NON-RESIDENTIAL DEVELOPMENT.

VICINITY MAP
(NOT TO SCALE)

GRAPHIC SCALE
40 0 20 40
(IN FEET)
1 inch = 40 ft.

TOCS
1-800-245-4545
txticket@1-call.com

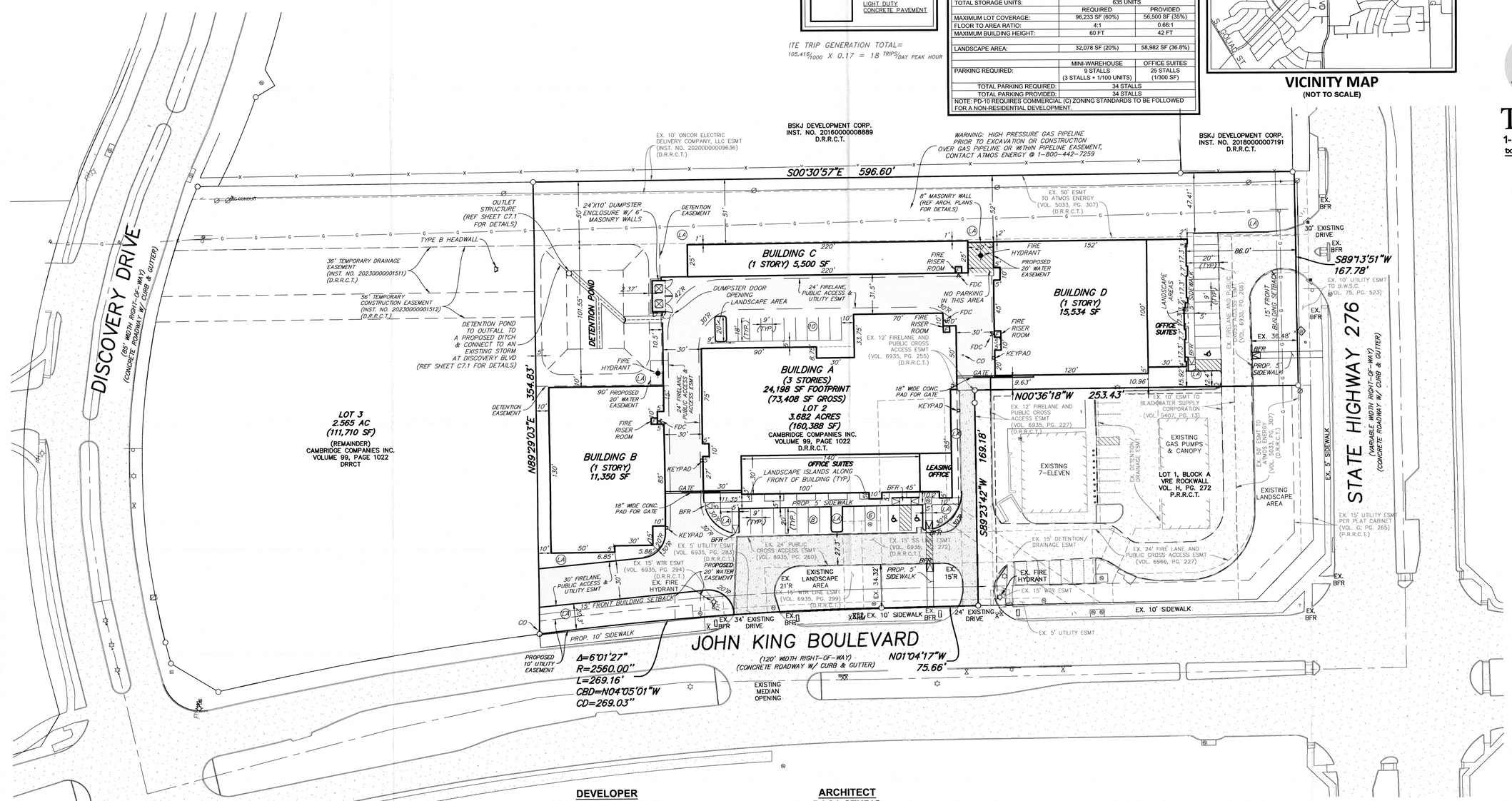

DEVELOPER
ADVANTAGE STORAGE
2221 LAKESIDE BOULEVARD, SUITE 1260
RICHARDSON, TEXAS 75082
CONTACT: RICK JONES
PHONE: (972) 547-0236

ARCHITECT
BACA STUDIO
100 N. TRAVIS STREET, SUITE 500A
SHERMAN, TEXAS 75090
CONTACT: DAVID BACA
PHONE: (903) 893-5800
EMAIL: DAVID@DAVIDBACASTUDIO.COM

ENGINEER
URBAN STRATEGY
1100 E CAMPBELL, SUITE 210
RICHARDSON, TX 75081
CONTACT: ROBERT L. PRUETT, P.E.
PHONE: (214) 295-5347
EMAIL: BOBP@URBANSTRATEGY.US

SURVEYOR
O'NEAL SURVEYING COMPANY
205 N. WINDCO CIRCLE, SUITE 100
WYLIE, TEXAS 75098
DANIEL C. O'NEAL
PHONE: (903) 804-2891
EMAIL: DANIEL.ONEAL@ONEALSURVEYING.COM

LANDSCAPE ARCHITECT
EVERGREEN DESIGN GROUP
15455 DALLAS PARKWAY, SUITE 600
ADDISON, TX 75001
DARCY BRANDON
PHONE: (800) 680-6630
EMAIL: DARCY@EVERGREENDESIGNGROUP.COM

APPROVED:
I HEREBY CERTIFY THAT THE ABOVE AND FOREGOING SITE PLAN FOR A DEVELOPMENT IN THE CITY OF ROCKWALL, TEXAS, WAS APPROVED BY THE PLANNING & ZONING COMMISSION OF THE CITY OF ROCKWALL ON THE 13th DAY OF September, 2022.

WITNESS OUR HANDS, THIS 15th DAY OF March, 2023.

PLANNING & ZONING COMMISSION, CHAIRMAN — *DIRECTOR OF PLANNING AND ZONING*

NO.	DATE	REVISION
		REV. BLDG A & C

TEL: 214.369.2339
www.urbanstrategy.us
URBAN STRATEGY
4222 Main Street
Dallas, Texas 75226
Firm Registration #F-22534

PRELIMINARY
NOT FOR CONSTRUCTION, BIDDING, OR PERMIT PURPOSE.
PREPARED UNDER THE SUPERVISION OF ROBERT L. PRUETT, JR. P.E.# 53662 ON 2/28/2023

ADVANTAGE STORAGE
STATE HIGHWAY 276
OUT OF THE JAMES M. ALLEN SURVEY, ABSTRACT NO. 2
CITY OF ROCKWALL, ROCKWALL COUNTY, TEXAS

AMENDED SITE PLAN

PROJECT:
PREPARED ON: 12/23/2022
CLIENT: ADVANTAGE STORAGE
DRAWN BY: LL
DESIGNER: LL
REVIEWER: BP
U.S. PROJECT: 22577
SHEET TITLE:
SHEET SP-1

FILE NAME: C-SITE.DWG
FILE LOCATION: G:\Drawing Files\Team Folders\Projects\2022\22577 Advantage Storage- John King US 276 Rockwall\CAD\Working Files\C-SITE.dwg
LAST MODIFIED BY: VICTOR ASEOVE
LAST MODIFIED ON: 2/28/2023 11:15 AM
PLOTTED ON: 2/28/2023 11:59 AM

CITY CASE NO. SP2022-044

EXTERIOR WALL FINISH MATERIALS		
BRICK	29%	1,743 SF
STUCCO	32%	1,936 SF
STONE	39%	2,413 SF
TOTAL	100%	6,092 SF

BUILDING TOTALS		
BRICK	51%	11,167 SF
STUCCO	25%	5,512 SF
STONE	24%	5,428 SF
TOTAL	100%	22,107 SF

4 BLDG A
WEST ELEVATION
SCALE: 3/32" = 1' 0"

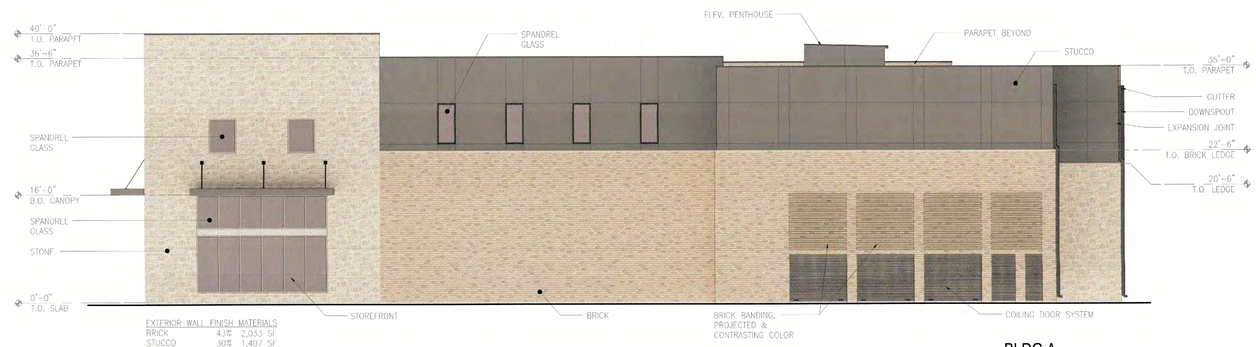

EXTERIOR WALL FINISH MATERIALS		
BRICK	43%	2,033 SF
STUCCO	30%	1,407 SF
STONE	27%	1,261 SF
TOTAL	100%	4,701 SF

3 BLDG A
SOUTH ELEVATION
SCALE: 3/32" = 1'-0"

EXTERIOR WALL FINISH MATERIALS		
BRICK	65%	4,163 SF
STUCCO	23%	1,469 SF
STONE	12%	773 SF
TOTAL	100%	6,425 SF

2 BLDG A
EAST ELEVATION
SCALE: 3/32" = 1'-0"

EXTERIOR WALL FINISH MATERIALS		
BRICK	67%	3,411 SF
STUCCO	14%	688 SF
STONE	19%	981 SF
TOTAL	100%	5,080 SF

1 BLDG A
NORTH ELEVATION
SCALE: 3/32" = 1' 0"

APPROVED:
I hereby certify that the above and foregoing site plan for development in the City of Rockwall, Texas, was approved by the Planning & Zoning Commission on the 19th day of September, 2022.

Planning & Zoning Commission, Chairman

Director of Planning & Zoning

BACA

100 NORTH TRAVIS STREET
SUITE NO.500
SHERMAN, TEXAS 75090

903.893.5800

www.BACA.team

DESIGN DEVELOPMENT REVIEW

NOT FOR REGULATORY APPROVAL, PERMITTING, OR CONSTRUCTION

REVISIONS

NO.	DESCRIPTION	DATE

exterior elevations - bldg a

Advantage Storage
New Storage Facility

1701 State Highway 276
Rockwall, Texas

PROJECT NUMBER
2225

DATE
01.11.23

SHEET NUMBER
A6.0

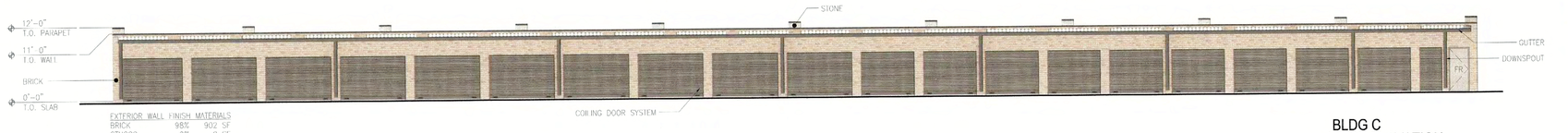

EXTERIOR WALL FINISH MATERIALS

BRICK	98%	902 SF
STUCCO	0%	0 SF
STONE	2%	17 SF
TOTAL	100%	919 SF

BUILDING TOTALS

BRICK	92%	3,504 SF
STUCCO	0%	0 SF
STONE	8%	306 SF
TOTAL	100%	3,810 SF

8 BLDG C
WEST ELEVATION
SCALE: 3/32" = 1'-0"

EXTERIOR WALL FINISH MATERIALS

BRICK	96%	282 SF
STUCCO	0%	0 SF
STONE	4%	13 SF
TOTAL	100%	295 SF

7 BLDG C
NORTH ELEVATION
SCALE: 3/32" = 1'-0"

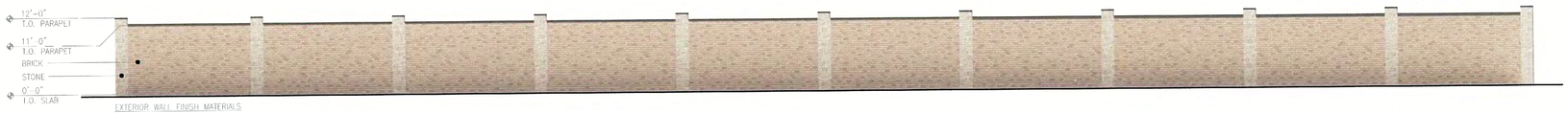

EXTERIOR WALL FINISH MATERIALS

BRICK	89%	2,174 SF
STUCCO	0%	0 SF
STONE	11%	264 SF
TOTAL	100%	2,438 SF

6 BLDG C
EAST ELEVATION
SCALE: 3/32" = 1'-0"

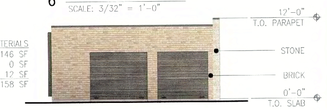

EXTERIOR WALL FINISH MATERIALS

BRICK	88%	146 SF
STUCCO	0%	0 SF
STONE	12%	12 SF
TOTAL	100%	158 SF

5 BLDG C
SOUTH ELEVATION
SCALE: 3/32" = 1'-0"

EXTERIOR WALL FINISH MATERIALS

BRICK	47%	515 SF
STUCCO	2%	18 SF
STONE	51%	552 SF
TOTAL	100%	1,085 SF

BUILDING TOTALS

BRICK	66%	4,573 SF
STUCCO	7%	471 SF
STONE	27%	1,843 SF
TOTAL	100%	6,887 SF

12 BLDG D
WEST ELEVATION
SCALE: 3/32" = 1'-0"

EXTERIOR WALL FINISH MATERIALS

BRICK	23%	297 SF
STUCCO	10%	132 SF
STONE	67%	861 SF
TOTAL	100%	1,290 SF

BUILDING TOTALS

BRICK	63%	3,479 SF
STUCCO	4%	205 SF
STONE	33%	1,832 SF
TOTAL	100%	5,516 SF

4 BLDG B
WEST ELEVATION
SCALE: 3/32" = 1'-0"

EXTERIOR WALL FINISH MATERIALS

BRICK	57%	1,352 SF
STUCCO	19%	450 SF
STONE	24%	562 SF
TOTAL	100%	2,364 SF

11 BLDG D
SOUTH ELEVATION
SCALE: 3/32" = 1'-0"

EXTERIOR WALL FINISH MATERIALS

BRICK	81%	1,418 SF
STUCCO	0%	1 SF
STONE	19%	315 SF
TOTAL	100%	1,734 SF

3 BLDG B
SOUTH ELEVATION
SCALE: 3/32" = 1'-0"

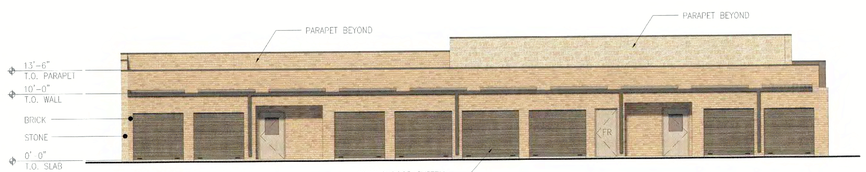

EXTERIOR WALL FINISH MATERIALS

BRICK	81%	1,047 SF
STUCCO	1%	4 SF
STONE	18%	234 SF
TOTAL	100%	1,285 SF

10 BLDG D
EAST ELEVATION
SCALE: 3/32" = 1'-0"

APPROVED:
I hereby certify that the above and foregoing site plan for development in the City of Rockwall, Texas, was approved by the Planning & Zoning Commission on the 13th day of Sept., 2022.

Planning & Zoning Commission, Chairman

Director of Planning & Zoning

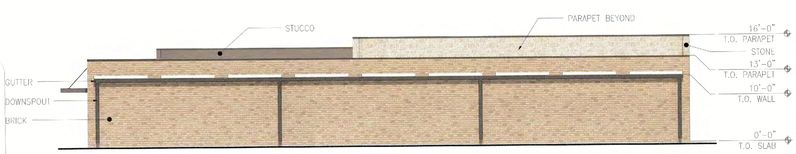

EXTERIOR WALL FINISH MATERIALS

BRICK	87%	1,115 SF
STUCCO	2%	37 SF
STONE	11%	136 SF
TOTAL	100%	1,288 SF

2 BLDG B
EAST ELEVATION
SCALE: 3/32" = 1'-0"

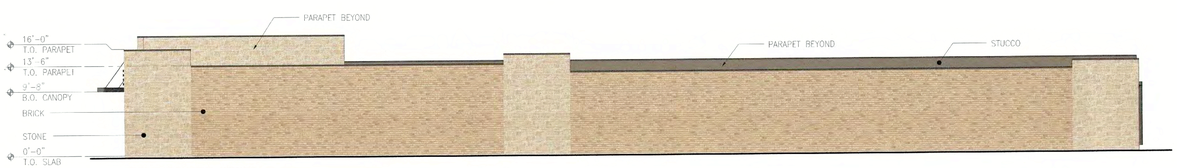

EXTERIOR WALL FINISH MATERIALS

BRICK	74%	1,659 SF
STUCCO	0%	0 SF
STONE	26%	572 SF
TOTAL	100%	2,231 SF

9 BLDG D
NORTH ELEVATION
SCALE: 3/32" = 1'-0"

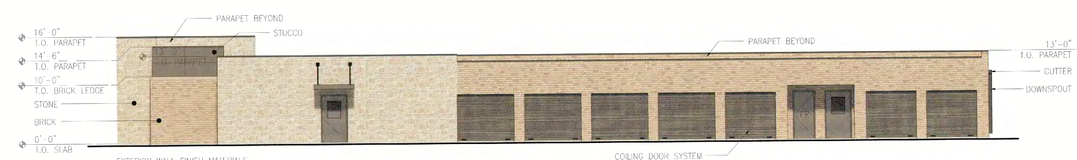

EXTERIOR WALL FINISH MATERIALS

BRICK	53%	658 SF
STUCCO	3%	42 SF
STONE	44%	533 SF
TOTAL	100%	1,232 SF

1 BLDG B
NORTH ELEVATION
SCALE: 3/32" = 1'-0"

exterior elevations - bldg's b, c, & d

BACA

100 NORTH TRAVIS STREET
SUITE NO.500
SHERMAN, TEXAS 75090

903.893.5800

www.BACA.team

DESIGN DEVELOPMENT REVIEW

NOT FOR REGULATORY APPROVAL, PERMITTING, OR CONSTRUCTION

REVISIONS

NO.	DESCRIPTION	DATE

Advantage Storage
New Storage Facility

1701 State Highway 276
Rockwall, Texas

PROJECT NUMBER
2225

DATE
01.11.23

SHEET NUMBER
A6.1

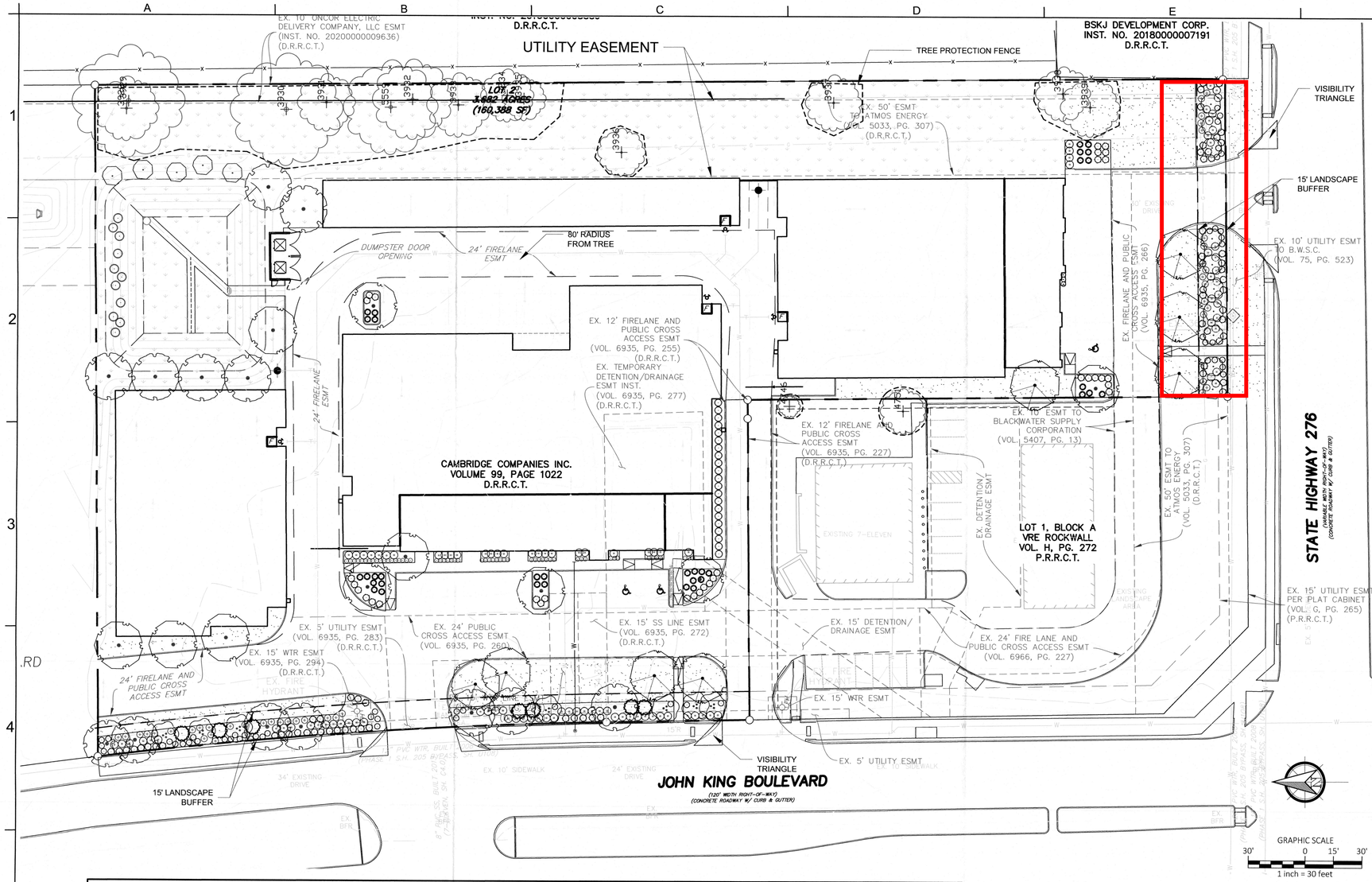

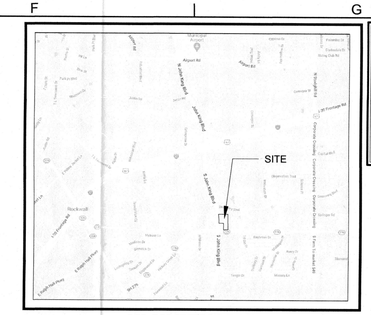

VICINITY MAP
(NOT TO SCALE)

EVERGREEN DESIGN GROUP
(800) 680-6630
15455 Dallas Pkwy., Ste 600
Addison, TX 75001
www.EvergreenDesignGroup.com

PLANT SCHEDULE

CANOPY TREES	QTY	BOTANICAL / COMMON NAME	CAL	SIZE
	8	ACER RUBRUM 'OCTOBER GLORY' OCTOBER GLORY MAPLE	4" CAL*	14'-16' HT
	13	QUERCUS MUHLENBERGIA CHINQUAPIN OAK	4" CAL*	14'-16' HT
	10	ULMUS CRASSIFOLIA CEDAR ELM	4" CAL*	16'-18' HT

*ALL CANOPY TREES TO BE USED FOR MITIGATION

ACCENT TREES	QTY	BOTANICAL / COMMON NAME	CAL	SIZE
	7	CERCIS CANADENSIS EASTERN REDBUD 3-5 STEMS	3" CAL. 1" / STEM	4`-6`- HT
	7	ILEX DECIDUA POSSUM HAW 3-5 STEMS	3" CAL. 1" / STEM	4`-6`- HT

LARGE SHRUBS	QTY	BOTANICAL / COMMON NAME	CONT
	15	RHUS VIRENS V. VIRENS EVERGREEN SUMAC	10 GAL 4'-6' HT

MEDIUM SHRUBS	QTY	BOTANICAL / COMMON NAME	CONT
	105	ILEX CORNUTA 'BURFORDII NANA' DWARF BURFORD HOLLY	5 GAL
	39	LOROPETALUM CHINENSE 'PURPLE DAYDREAM' DWARF FRINGEFLOWER	5 GAL.

SMALL SHRUBS	QTY	BOTANICAL / COMMON NAME	CONT
	49	BERBERIS THUN. 'CRIMSON PYGMY' CRIMSON PYGMY BARBERRY	5 GAL.
	34	HESPERALOE PARVIFLORA RED YUCCA	3 GAL
	95	LANTANA X `NEW GOLD` NEW GOLD LANTANA	5 GAL

ORNAMENTAL GRASSES	QTY	BOTANICAL / COMMON NAME	CONT
	32	MUHLENBERGIA RIGENS DEER GRASS	5 GAL

GROUND COVER	QTY	BOTANICAL / COMMON NAME	CONT
	53	RUELLIA BRITTONIANA 'KATIE' KATIE'S DWARF PETUNIA	3 GAL
	13,325 SF	CYNODON 'TIFWAY 419' TIFWAY 419 BERMUDA GRASS	SOD
	38,885 SF	BLACKLAND PRAIRIE SEED MIX NATIVE AMERICAN SEED (SEEDSOURCE.COM)	HYDROSEED

LANDSCAPE STANDARDS

05.01 LANDSCAPE BUFFERS - NON-RESIDENTIAL	
REQ. ABUTTING A PUBLIC RIGHT-OF-WAY:	15' WIDE BUFFER REQ. W/ 2 CANOPY + 4 ACCENT TREE PER 100 LIN. FT. OF FRONTAGE; GROUND COVER, BUILT-UP BERM AND SHRUBBERY ALONG ENTIRE FRONTAGE, 30" HIGH, MIN.- 48" MAX. HT.
JOHN KING BLVD.: REQUIRED PLANTING: PROVIDED 15' BUFFER:	±344.8' STREET FRONTAGE 7 CANOPY TREES, 14 ACCENT TREES, BERM W/ SHRUBS 7 NEW CANOPY TREES, 14 ACCENT TREES W/ BERM AND SHRUBS (30" HIGH MIN.)
ST. HWY. 276 OVERLAY DISTRICT: ±167.8 STREET FRONTAGE	15' WIDE LANDSCAPE BUFFER W/ GR. COVER, BUILT-UP BERM & SHRUBS (30" MIN.-48" MAX) ALONG ENTIRE LENGTH OF FRONTAGE. 2 CANOPY TREES + 4 ACCENT TREES PER 100 LIN. FEET OF FRONTAGE
REQUIRED PLANTING: PROVIDED 15' BUFFER:	3 CANOPY TREES, 7 ACCENT TREES, BERM W/ SHRUBS UNABLE TO PROVIDE REQ. TREES DUE TO EASEMENTS & UNDERGROUND UTILITIES (WATER, STORM, SANITARY) REPLACE TREES W/ 10 LG. SHRUBS, BERM WITH SHRUBS (30" HI MIN.-48" MAX.)
EAST PROPERTY LINE BUFFER:	NOT REQUIRED. PROPERTY ZONED PD-10
NORTH PROPERTY LINE BUFFER:	NOT REQUIRED. PROPERTY ZONED LIGHT INDUSTRIAL
05.02 LANDSCAPE SCREENING	
REQ. HEADLIGHT SCREENING	NOT APPLICABLE
SCREENING FROM RESIDENTIAL	NOT APPLICABLE

05.03 LANDSCAPE REQUIREMENTS - COMMERCIAL (C) DISTRICT	
TOTAL SITE AREA:	±160,353 SF
LANDSCAPE AREA REQUIRED TOTAL SITE:	32,071 SF (20%)
LANDSCAPE PROVIDED, TOTAL SITE:	±58,742 SF (36.6%)
LOCATION OF LANDSCAPING:	MIN. 50% OF REQ. LANDSCAPING SHALL BE LOCATED IN THE FRONT OF & ALONG THE SIDE OF BUILDINGS W/ STREET FRONTAGE.
LANDSCAPE AREAS IN FRONT & SIDES OF BUILDINGS:	±40,718 SF (69%)
MIN. SIZE OF AREAS:	ALL REQ. LANDSCAPING SHALL BE NO LESS THAN 5' WIDE AND A MIN. OF 25 SF IN AREA
DETENTION BASIN (XERISCAPE OPTION):	MIN. (1) SHRUB/ORNAMENTAL GRASS PER 750 SF OF DRY LAND AREA
PROPOSED DETENTION BASIN LANDSCAPING:	5,649 / 750 = 8 SHRUBS + NATIVE GRASSES
PARKING LOT LANDSCAPING	MIN. 5% OR 200 SF OF LANDSCAPING, WHICHEVER IS GREATER, IN THE INTERIOR OF PARKING LOT AREA.
PROPOSED PARKING AREA:	±29,004 SF
REQ. PARKING LOT LANDSCAPING:	±1,450 SF (29,004 x 5%) AND (1) LG. CANOPY TREE FOR EVERY 10 PARKING SPACES INTERNAL TO PARKING AREAS (PARKING AREA OVER 20,000 SF) REQ. PARKING SPACES MUST BE WITHIN 80' OF A CANOPY TREE TRUNK
PROPOSED PARKING LOT LANDSCAPING:	±1,528 SF (5%)
	34 PARKING SPACES / 10 = 3 TREES
TREES PROVIDED:	5 CANOPY TREES

MULCHES

AFTER ALL PLANTING IS COMPLETE, CONTRACTOR SHALL INSTALL 3" THICK LAYER OF 1-1/2" SHREDDED WOOD MULCH, NATURAL (UNDYED). IN ALL PLANTING AREAS (EXCEPT FOR TURF AND SEEDED AREAS). CONTRACTOR SHALL SUBMIT SAMPLES OF ALL MULCHES TO LANDSCAPE ARCHITECT AND OWNER FOR APPROVAL PRIOR TO CONSTRUCTION. ABSOLUTELY NO EXPOSED GROUND SHALL BE LEFT SHOWING ANYWHERE ON THE PROJECT AFTER MULCH HAS BEEN INSTALLED (SUBJECT TO THE CONDITIONS AND REQUIREMENTS OF THE "GENERAL GRADING AND PLANTING NOTES" AND SPECIFICATIONS).

ROOT BARRIERS

THE CONTRACTOR SHALL INSTALL ROOT BARRIERS NEAR ALL NEWLY-PLANTED TREES THAT ARE LOCATED WITHIN FIVE (5) FEET OF PAVING OR CURBS. ROOT BARRIERS SHALL BE "CENTURY" OR "DEEP-ROOT" 24" DEEP PANELS (OR EQUAL). BARRIERS SHALL BE LOCATED IMMEDIATELY ADJACENT TO HARDSCAPE. INSTALL PANELS PER MANUFACTURER'S RECOMMENDATIONS. UNDER NO CIRCUMSTANCES SHALL THE CONTRACTOR USE ROOT BARRIERS OF A TYPE THAT COMPLETELY ENCIRCLE THE ROOTBALL.

UTILITY SCREENING NOTE:
GROUND MOUNTED EQUIPMENT AND AIR CONDITIONING UNITS SHALL BE SCREENED UTILIZING PLANTINGS, BERMS, WALLS MATCHING THE MAIN STRUCTURE, OR AN ARCHITECTURAL FEATURE THAT IS INTEGRAL TO THE BUILDING'S DESIGN.

TREE MITIGATION SUMMARY

TOTAL MITIGATION REQUIRED:	119.75"
MITIGATION PROVIDED BY PLANTING 4" CALIPER TREES (31) TO BE PLANTED ONSITE:	124.0"
MITIGATION PROVIDED BY PURCHASING PRESERVATION CREDITS (20% OF TOTAL):	0"
TOTAL MITIGATION PROVIDED:	124.0"

CONTACT 811 BEFORE YOU DIG 811 SAFE DIGGING PARTNER

APPROVED:
I HEREBY CERTIFY THAT THE ABOVE AND FOREGOING SITE PLAN FOR A DEVELOPMENT IN THE CITY OF ROCKWALL, TEXAS, WAS APPROVED BY THE PLANNING & ZONING COMMISSION OF THE CITY OF ROCKWALL ON THE 13th DAY OF September 2022

WITNESS OUR HANDS, THIS 15th DAY OF March, 2023

PLANNING & ZONING COMMISSION, CHAIRMAN

DIRECTOR OF PLANNING AND ZONING

SITE DATA TABLE

EXISTING USE:	VACANT	
PROPOSED USE:	MINI-WAREHOUSE & OFFICE SUITES	
EXISTING ZONING DISTRICT:	PLANNED DEVELOPMENT (PD-10)	
SITE AREA (LOT 2):	3.682 AC (160,388 SF)	
SITE AREA (LOT 3):	2.565 AC (111,719 SF)	
TOTAL SITE AREA:	6.247 AC (272,107 SF)	
FOR LOT 2 ONLY		
BUILDING AREA	MINI-WAREHOUSE	OFFICE SUITES
BUILDING A (3 STORIES):	69,250 SF	4,400 SF
BUILDING B (1 STORY):	11,350 SF	0 SF
BUILDING C (1 STORY):	4,000 SF	0 SF
BUILDING D (1 STORY):	13,100 SF	3,000 SF
TOTAL BUILDING AREA:	105,100 SF	
TOTAL BUILDING FOOTPRINT AREA:	56,000 SF	
TOTAL STORAGE UNITS:	635 UNITS	
	REQUIRED	PROVIDED
MAXIMUM LOT COVERAGE:	96,233 SF (60%)	56,000 SF (35%)
FLOOR TO AREA RATIO:	4:1	0.66:1
MAXIMUM BUILDING HEIGHT:	60 FT	42 FT
LANDSCAPE AREA:	32,078 SF (20%)	58,982 SF (36.8%)
	MINI-WAREHOUSE	OFFICE SUITES
PARKING REQUIRED:	9 STALLS (3 STALLS + 1/100 UNITS)	25 STALLS (1/300 SF)
TOTAL PARKING REQUIRED:	34 STALLS	
TOTAL PARKING PROVIDED:	34 STALLS	

NOTE: PD-10 REQUIRES COMMERCIAL (C) ZONING STANDARDS TO BE FOLLOWED FOR A NON-RESIDENTIAL DEVELOPMENT.

NO.	DATE	REVISION

TEL: 214-295-5775
www.urbanstruct.com
URBAN STRUCTURE
8140 Walnut Hill Lane, Suite 905
Dallas, Texas 75231
Firm Registration #F-22323

REGISTERED LANDSCAPE ARCHITECT
LANCE R. BRANDON
3423
STATE OF TEXAS
01/31/2023

ADVANTAGE STORAGE
1701 STATE HIGHWAY 276
OUT OF THE JAMES M. ALLEN SURVEY, ABSTRACT NO. 2
CITY OF ROCKWALL, ROCKWALL COUNTY, TEXAS

LANDSCAPE PLANTING PLAN

PROJECT:

SHEET TITLE:

PREPARED ON: 07/14/2022
CLIENT: ADVANTAGE STORAGE
DRAWN BY: LL
DESIGNER: LL
REVIEWER: BP
U.S. PROJECT: 22577

SHEET
LP-1

CITY CASE NO. ######

A | B | C | D | E | F | G

PLANTING SPECIFICATIONS

GENERAL

A. QUALIFICATIONS OF LANDSCAPE CONTRACTOR
   1. ALL LANDSCAPE WORK SHOWN ON THESE PLANS SHALL BE PERFORMED BY A SINGLE FIRM SPECIALIZING IN LANDSCAPE PLANTING.
   2. A LIST OF SUCCESSFULLY COMPLETED PROJECTS OF THIS TYPE, SIZE AND NATURE MAY BE REQUESTED BY THE OWNER FOR FURTHER QUALIFICATION MEASURES.
   3. THE LANDSCAPE CONTRACTOR SHALL HOLD A VALID NURSERY AND FLORAL CERTIFICATE ISSUED BY THE TEXAS DEPARTMENT OF AGRICULTURE, AS WELL AS OPERATE UNDER A COMMERCIAL PESTICIDE APPLICATOR LICENSE ISSUED BY EITHER THE TEXAS DEPARTMENT OF AGRICULTURE OR THE TEXAS STRUCTURAL PEST CONTROL BOARD.

B. SCOPE OF WORK
   1. WORK COVERED BY THESE SECTIONS INCLUDES THE FURNISHING AND PAYMENT OF ALL MATERIALS, LABOR, SERVICES, EQUIPMENT, LICENSES, TAXES AND ANY OTHER ITEMS THAT ARE NECESSARY FOR THE EXECUTION, INSTALLATION AND COMPLETION OF ALL WORK, SPECIFIED HEREIN AND / OR SHOWN ON THE LANDSCAPE PLANS, NOTES, AND DETAILS.
   2. ALL WORK SHALL BE PERFORMED IN ACCORDANCE WITH ALL APPLICABLE LAWS, CODES AND REGULATIONS REQUIRED BY AUTHORITIES HAVING JURISDICTION OVER SUCH WORK, INCLUDING ALL INSPECTIONS AND PERMITS REQUIRED BY FEDERAL, STATE AND LOCAL AUTHORITIES IN SUPPLY, TRANSPORTATION AND INSTALLATION OF MATERIALS.
   3. THE LANDSCAPE CONTRACTOR SHALL VERIFY THE LOCATION OF ALL UNDERGROUND UTILITY LINES (WATER, SEWER, ELECTRICAL, TELEPHONE, GAS, CABLE, TELEVISION, ETC.) PRIOR TO THE START OF ANY WORK.

PRODUCTS

A. ALL MANUFACTURED PRODUCTS SHALL BE NEW.
B. CONTAINER AND BALLED-AND-BURLAPPED PLANTS:
   1. FURNISH NURSERY-GROWN PLANTS COMPLYING WITH ANSI Z60.1-2014. PROVIDE WELL-SHAPED, FULLY BRANCHED, HEALTHY, VIGOROUS STOCK FREE OF DISEASE, INSECTS, EGGS, LARVAE, AND DEFECTS SUCH AS KNOTS, SUN SCALD, INJURIES, ABRASIONS, AND DISFIGUREMENT. ALL PLANTS WITHIN A SPECIES SHALL HAVE SIMILAR SIZE, AND SHALL BE OF A FORM TYPICAL FOR THE SPECIES. ALL TREES SHALL BE OBTAINED FROM SOURCES WITHIN 200 MILES OF THE PROJECT SITE, AND WITH SIMILAR CLIMACTIC CONDITIONS.
   2. ROOT SYSTEMS SHALL BE HEALTHY, DENSELY BRANCHED ROOT SYSTEMS, NON-POT-BOUND, FREE FROM ENCIRCLING AND/OR GIRDLING ROOTS, AND FREE FROM ANY OTHER ROOT DEFECTS (SUCH AS J-SHAPED ROOTS).
   3. TREES MAY BE PLANTED FROM CONTAINERS OR BALLED-AND-BURLAPPED (B&B), UNLESS SPECIFIED ON THE PLANTING LEGEND. BARE-ROOT TREES ARE NOT ACCEPTABLE.
   4. ANY PLANT DEEMED UNACCEPTABLE BY THE LANDSCAPE ARCHITECT OR OWNER SHALL BE IMMEDIATELY REMOVED FROM THE SITE AND SHALL BE REPLACED WITH AN ACCEPTBLE PLANT OF LIKE TYPE AND SIZE AT THE CONTRACTOR'S OWN EXPENSE. ANY PLANTS APPEARING TO BE UNHEALTHY, EVEN IF DETERMINED TO STILL BE ALIVE, SHALL NOT BE ACCEPTED. THE LANDSCAPE ARCHITECT AND OWNER SHALL BE THE SOLE JUDGES AS TO THE ACCEPTABILITY OF PLANT MATERIAL.
   5. ALL TREES SHALL BE STANDARD IN FORM, UNLESS OTHERWISE SPECIFIED. TREES WITH CENTRAL LEADERS WILL NOT BE ACCEPTED IF LEADER IS DAMAGED OR REMOVED. PRUNE ALL DAMAGED TWIGS AFTER PLANTING.
   6. CALIPER MEASUREMENTS FOR STANDARD (SINGLE TRUNK) TREES SHALL BE AS FOLLOWS: SIX INCHES ABOVE THE ROOT FLARE FOR TREES UP TO AND INCLUDING FOUR INCHES IN CALIPER, AND TWELVE INCHES ABOVE THE ROOT FLARE FOR TREES EXCEEDING FOUR INCHES IN CALIPER.
   7. MULTI-TRUNK TREES SHALL BE MEASURED BY THEIR OVERALL HEIGHT, MEASURED FROM THE TOP OF THE ROOT BALL. WHERE CALIPER MEASUREMENTS ARE USED, THE CALIPER SHALL BE CALCULATED AS ONE-HALF OF THE SUM OF THE CALIPER OF THE THREE LARGEST TRUNKS.
   8. ANY TREE OR SHRUB SHOWN TO HAVE EXCESS SOIL PLACED ON TOP OF THE ROOT BALL, SO THAT THE ROOT FLARE HAS BEEN COMPLETELY COVERED, SHALL BE REJECTED.
C. SOD: PROVIDE WELL-ROOTED SOD OF THE VARIETY NOTED ON THE PLANS. SOD SHALL BE CUT FROM HEALTHY, MATURE TURF WITH SOIL THICKNESS OF 3/4" TO 1". EACH PALLET OF SOD SHALL BE ACCOMPANIED BY A CERTIFICATE FROM SUPPLIER STATING THE COMPOSITION OF THE SOD.
D. TOPSOIL: SANDY TO CLAY LOAM TOPSOIL, FREE OF STONES LARGER THAN ½ INCH, FOREIGN MATTER, PLANTS, ROOTS, AND SEEDS.
E. COMPOST: WELL-COMPOSTED, STABLE, AND WEED-FREE ORGANIC MATTER, pH RANGE OF 5.5 TO 8; MOISTURE CONTENT 35 TO 55 PERCENT BY WEIGHT; 100 PERCENT PASSING THROUGH 3/4-INCH SIEVE; SOLUBLE SALT CONTENT OF 5 TO 10 DECISIEMENS/M; NOT EXCEEDING 0.5 PERCENT INERT CONTAMINANTS AND FREE OF SUBSTANCES TOXIC TO PLANTINGS. NO MANURE OR ANIMAL-BASED PRODUCTS SHALL BE USED.
F. FERTILIZER: GRANULAR FERTILIZER CONSISTING OF NITROGEN, PHOSPHORUS, POTASSIUM, AND OTHER NUTRIENTS IN PROPORTIONS, AMOUNTS, AND RELEASE RATES RECOMMENDED IN A SOIL REPORT FROM A QUALIFIED SOIL-TESTING AGENCY (SEE BELOW).
G. MULCH: SIZE AND TYPE AS INDICATED ON PLANS, FREE FROM DELETERIOUS MATERIALS AND SUITABLE AS A TOP DRESSING OF TREES AND SHRUBS.
H. TREE STAKING AND GUYING
   1. STAKES: 6' LONG GREEN METAL T-POSTS.
   2. GUY AND TIE WIRE: ASTM A 641, CLASS 1, GALVANIZED-STEEL WIRE, 2-STRAND, TWISTED, 0.106 INCH DIAMETER.
   3. STRAP CHAFING GUARD: REINFORCED NYLON OR CANVAS AT LEAST 1-1/2 INCH WIDE, WITH GROMMETS TO PROTECT TREE TRUNKS FROM DAMAGE.
I. STEEL EDGING: PROFESSIONAL STEEL EDGING, 14 GAUGE THICK X 4 INCHES WIDE, FACTORY PAINTED DARK GREEN. ACCEPTABLE MANUFACTURERS INCLUDE COL-MET OR APPROVED EQUAL.
J. PRE-EMERGENT HERBICIDES: ANY GRANULAR, NON-STAINING PRE-EMERGENT HERBICIDE THAT IS LABELED FOR THE SPECIFIC ORNAMENTALS OR TURF ON WHICH IT WILL BE UTILIZED. PRE-EMERGENT HERBICIDES SHALL BE APPLIED PER THE MANUFACTURER'S LABELED RATES.

METHODS

A. SOIL PREPARATION
   1. BEFORE STARTING WORK, THE LANDSCAPE CONTRACTOR SHALL VERIFY THAT THE GRADE OF ALL LANDSCAPE AREAS ARE WITHIN +/-0.1' OF FINISH GRADE. THE CONTRACTOR SHALL NOTIFY THE OWNER IMMEDIATELY SHOULD ANY DISCREPANCIES EXIST.
   2. SOIL TESTING:
      a. AFTER FINISH GRADES HAVE BEEN ESTABLISHED, CONTRACTOR SHALL HAVE SOIL SAMPLES FROM THE PROJECT'S LANDSCAPE AREAS TESTED BY AN ESTABLISHED SOIL TESTING LABORATORY. EACH SAMPLE SUBMITTED TO THE LAB SHALL CONTAIN NO LESS THAN ONE QUART OF SOIL, TAKEN FROM BETWEEN THE SOIL SURFACE AND 6" DEPTH. IF NO SAMPLE LOCATIONS ARE INDICATED ON THE PLANS, THE CONTRACTOR SHALL TAKE A MINIMUM OF THREE SAMPLES FROM VARIOUS REPRESENTATIVE LOCATIONS FOR TESTING.
      b. THE CONTRACTOR SHALL HAVE THE SOIL TESTING LABORATORY PROVIDE RESULTS FOR THE FOLLOWING: SOIL TEXTURAL CLASS, GENERAL SOIL FERTILITY, pH, ORGANIC MATTER CONTENT, SALT (CEC), LIME, SODIUM ADSORPTION RATIO (SAR) AND BORON CONTENT.
      c. THE CONTRACTOR SHALL ALSO SUBMIT THE PROJECT'S PLANT LIST TO THE LABORATORY ALONG WITH THE SOIL SAMPLES.
      d. THE SOIL REPORT PRODUCED BY THE LABORATORY SHALL CONTAIN RECOMMENDATIONS FOR THE FOLLOWING (AS APPROPRIATE): SEPARATE SOIL PREPARATION AND BACKFILL MIX RECOMMENDATIONS FOR GENERAL ORNAMENTAL PLANTS, XERIC PLANTS, TURF, AND NATIVE SEED, AS WELL AS PRE-PLANT FERTILIZER APPLICATIONS AND RECOMMENDATIONS FOR ANY OTHER SOIL RELATED ISSUES. THE REPORT SHALL ALSO PROVIDE A FERTILIZER PROGRAM FOR THE ESTABLISHMENT PERIOD AND FOR LONG-TERM MAINTENANCE.
   3. THE CONTRACTOR SHALL INSTALL SOIL AMENDMENTS AND FERTILIZERS PER THE SOILS REPORT RECOMMENDATIONS. ANY CHANGE IN COST DUE TO THE SOIL REPORT RECOMMENDATIONS, EITHER INCREASE OR DECREASE, SHALL BE SUBMITTED TO THE OWNER WITH THE REPORT.
   4. FOR BIDDING PURPOSES ONLY, THE SOIL PREPARATION SHALL CONSIST OF THE FOLLOWING:
      a. TURF: INCORPORATE THE FOLLOWING AMENDMENTS INTO THE TOP 8" OF SOIL BY MEANS OF ROTOTILLING AFTER CROSS-RIPPING:
      i. NITROGEN STABILIZED ORGANIC AMENDMENT - 4 CU. YDS. PER 1,000 S.F.
      ii. PREPLANT TURF FERTILIZER (10-20-10 OR SIMILAR, SLOW RELEASE, ORGANIC) - 15 LBS PER 1,000 S.F.
      iii. "CLAY BUSTER" OR EQUAL - USE MANUFACTURER'S RECOMMENDED RATE
      b. TREES, SHRUBS, AND PERENNIALS: INCORPORATE THE FOLLOWING AMENDMENTS INTO THE TOP 8" OF SOIL BY MEANS OF ROTOTILLING AFTER CROSS-RIPPING:
      i. NITROGEN STABILIZED ORGANIC AMENDMENT - 4 CU. YDS. PER 1,000 S.F.
      ii. 12-12-12 FERTILIZER (OR SIMILAR, ORGANIC, SLOW RELEASE) - 10 LBS. PER CU. YD.
      iii. "CLAY BUSTER" OR EQUAL - USE MANUFACTURER'S RECOMMENDED RATE
      iv. IRON SULPHATE - 2 LBS. PER CU. YD.
   5. IN THE CONTEXT OF THESE PLANS, NOTES, AND SPECIFICATIONS, "FINISH GRADE" REFERS TO THE FINAL ELEVATION OF THE SOIL SURFACE (NOT TOP OF MULCH) AS INDICATED ON THE GRADING PLANS.
      a. BEFORE STARTING WORK, THE LANDSCAPE CONTRACTOR SHALL VERIFY THAT THE ROUGH GRADES OF ALL LANDSCAPE AREAS ARE WITHIN +/-0.1' OF FINISH GRADE. SEE SPECIFICATIONS FOR MORE DETAILED INSTRUCTION ON TURF AREA AND PLANTING BED PREPARATION.
      b. CONSTRUCT AND MAINTAIN FINISH GRADES AS SHOWN ON GRADING PLANS, AND CONSTRUCT AND MAINTAIN SLOPES AS RECOMMENDED BY THE GEOTECHNICAL REPORT. ALL LANDSCAPE AREAS SHALL HAVE POSITIVE DRAINAGE AWAY FROM STRUCTURES AT THE MINIMUM SLOPE SPECIFIED IN THE REPORT AND ON THE GRADING PLANS, AND AREAS OF POTENTIAL PONDING SHALL BE REGRADED TO BLEND IN WITH THE SURROUNDING GRADES AND ELIMINATE PONDING POTENTIAL.
      c. THE LANDSCAPE CONTRACTOR SHALL DETERMINE WHETHER OR NOT THE EXPORT OF ANY SOIL WILL BE NEEDED, TAKING INTO ACCOUNT THE ROUGH GRADE PROVIDED, THE AMOUNT OF SOIL AMENDMENTS TO BE ADDED (**BASED ON A SOIL TEST**, PER SPECIFICATIONS), AND THE FINISH GRADES TO BE ESTABLISHED.
      d. ENSURE THAT THE FINISH GRADE IN SHRUB AREAS IMMEDIATELY ADJACENT TO WALKS AND OTHER WALKING SURFACES, AFTER INSTALLING SOIL AMENDMENTS, IS 3" BELOW THE ADJACENT FINISH SURFACE, IN ORDER TO ALLOW FOR PROPER MULCH DEPTH. TAPER THE SOIL SURFACE TO MEET FINISH GRADE, AS SPECIFIED ON THE GRADING PLANS, AT APPROXIMATELY 18" AWAY FROM THE WALKS.
      e. ENSURE THAT THE FINISH GRADE IN TURF AREAS IMMEDIATELY ADJACENT TO WALKS AND OTHER WALKING SURFACES, AFTER INSTALLING SOIL AMENDMENTS, IS 1" BELOW THE FINISH SURFACE OF THE WALKS. TAPER THE SOIL SURFACE TO MEET FINISH GRADE, AS SPECIFIED ON THE GRADING PLANS, AT APPROXIMATELY 18" AWAY FROM THE WALKS.
      f. SHOULD ANY CONFLICTS AND/OR DISCREPANCIES ARISE BETWEEN THE GRADING PLANS, GEOTECHNICAL REPORT, THESE NOTES AND PLANS, AND ACTUAL CONDITIONS, THE CONTRACTOR SHALL IMMEDIATELY BRING SUCH ITEMS TO THE ATTENTION OF THE LANDSCAPE ARCHITECT, GENERAL CONTRACTOR, AND OWNER.
   6. ONCE SOIL PREPARATION IS COMPLETE, THE LANDSCAPE CONTRACTOR SHALL ENSURE THAT THERE ARE NO DEBRIS, TRASH, OR STONES LARGER THAN 1" REMAINING IN THE TOP 6" OF SOIL.

B. SUBMITTALS
   1. THE CONTRACTOR SHALL PROVIDE SUBMITTALS AND SAMPLES, IF REQUIRED, TO THE LANDSCAPE ARCHITECT, AND RECEIVE APPROVAL IN WRITING FOR SUCH SUBMITTALS BEFORE WORK COMMENCES.
   2. SUBMITTALS SHALL INCLUDE PHOTOS OF PLANTS WITH A RULER OR MEASURING STICK FOR SCALE, PHOTOS OR SAMPLES OF ANY REQUIRED MULCHES, AND SOIL TEST RESULTS AND PREPARATION RECOMMENDATIONS FROM THE TESTING LAB (INCLUDING COMPOST AND FERTILIZER RATES AND TYPES, AND OTHER AMENDMENTS FOR TREE/SHRUB, TURF, AND SEED AREAS AS MAY BE APPROPRIATE).
   3. SUBMITTALS SHALL ALSO INCLUDE MANUFACTURER CUT SHEETS FOR PLANTING ACCESSORIES SUCH AS TREE STAKES AND TIES, EDGING, AND LANDSCAPE FABRICS (IF ANY).
   4. WHERE MULTIPLE ITEMS ARE SHOWN ON A PAGE, THE CONTRACTOR SHALL CLEARLY INDICATE THE ITEM BEING CONSIDERED.
C. GENERAL PLANTING
   1. REMOVE ALL NURSERY TAGS AND STAKES FROM PLANTS.
   2. EXCEPT IN AREAS TO BE PLANTED WITH ORNAMENTAL GRASSES, APPLY PRE-EMERGENT HERBICIDES AT THE MANUFACTURER'S RECOMMENDED RATE.
   3. TRENCHING NEAR EXISTING TREES:
      a. CONTRACTOR SHALL NOT DISTURB ROOTS 1-1/2" AND LARGER IN DIAMETER WITHIN THE CRITICAL ROOT ZONE (CRZ) OF EXISTING TREES, AND SHALL EXERCISE ALL POSSIBLE CARE AND PRECAUTIONS TO AVOID INJURY TO TREE ROOTS, TRUNKS, AND BRANCHES. THE CRZ IS DEFINED AS A CIRCULAR AREA EXTENDING OUTWARD FROM THE TREE TRUNK, WITH A RADIUS EQUAL TO 1' FOR EVERY 1" OF TRUNK DIAMETER-AT-BREAST-HEIGHT (4.5' ABOVE THE AVERAGE GRADE AT THE TRUNK).
      b. ALL EXCAVATION WITHIN THE CRZ SHALL BE PERFORMED USING HAND TOOLS. NO MACHINE EXCAVATION OR TRENCHING OF ANY KIND SHALL BE ALLOWED WITHIN THE CRZ.
      c. ALTER ALIGNMENT OF PIPE TO AVOID TREE ROOTS 1-1/2" AND LARGER IN DIAMETER. WHERE TREE ROOTS 1-1/2" AND LARGER IN DIAMETER ARE ENCOUNTERED IN THE FIELD, TUNNEL UNDER SUCH ROOTS. WRAP EXPOSED ROOTS WITH SEVERAL LAYERS OF BURLAP AND KEEP MOIST. CLOSE ALL TRENCHES WITHIN THE CANOPY DRIP LINES WITHIN 24 HOURS.
      d. ALL SEVERED ROOTS SHALL BE HAND PRUNED WITH SHARP TOOLS AND ALLOWED TO AIR-DRY. DO NOT USE ANY SORT OF SEALERS OR WOUND PAINTS.
D. TREE PLANTING
   1. TREE PLANTING HOLES SHALL BE EXCAVATED TO MINIMUM WIDTH OF TWO TIMES THE WIDTH OF THE ROOTBALL, AND TO A DEPTH EQUAL TO THE DEPTH OF THE ROOTBALL LESS TWO TO FOUR INCHES.
   2. SCARIFY THE SIDES AND BOTTOM OF THE PLANTING HOLE PRIOR TO THE PLACEMENT OF THE TREE. REMOVE ANY GLAZING THAT MAY HAVE BEEN CAUSED DURING THE EXCAVATION OF THE HOLE.
   3. FOR CONTAINER AND BOX TREES, TO REMOVE ANY POTENTIALLY GIRDLING ROOTS AND OTHER ROOT DEFECTS, THE CONTRACTOR SHALL SHAVE A 1" LAYER OFF OF THE SIDES AND BOTTOM OF THE ROOTBALL OF ALL TREES JUST BEFORE PLACING INTO THE PLANTING PIT. DO NOT "TEASE" ROOTS OUT FROM THE ROOTBALL.
   4. INSTALL THE TREE ON UNDISTURBED SUBGRADE SO THAT THE TOP OF THE ROOTBALL IS TWO TO FOUR INCHES ABOVE THE SURROUNDING GRADE.
   5. BACKFILL THE TREE HOLE UTILIZING THE EXISTING TOPSOIL FROM ON-SITE. ROCKS LARGER THAN 1" DIA. AND ALL OTHER DEBRIS SHALL BE REMOVED FROM THE SOIL PRIOR TO THE BACKFILL. SHOULD ADDITIONAL SOIL BE REQUIRED TO ACCOMPLISH THIS TASK, USE STORED TOPSOIL FROM ON-SITE OR IMPORT ADDITIONAL TOPSOIL FROM OFF-SITE AT NO ADDITIONAL COST TO THE OWNER. IMPORTED TOPSOIL SHALL BE OF SIMILAR TEXTURAL CLASS AND COMPOSITION IN THE ON-SITE SOIL.
   6. TREES SHALL NOT BE STAKED UNLESS LOCAL CONDITIONS (SUCH AS HEAVY WINDS OR SLOPES) REQUIRE STAKES TO KEEP TREES UPRIGHT. SHOULD STAKING BE REQUIRED, THE TOTAL NUMBER OF TREE STAKES (BEYOND THE MINIMUMS LISTED BELOW) WILL BE LEFT TO THE LANDSCAPE CONTRACTOR'S DISCRETION. SHOULD ANY TREES FALL OR LEAN, THE LANDSCAPE CONTRACTOR SHALL STRAIGHTEN THE TREE, OR REPLACE IT SHOULD IT BECOME DAMAGED. TREE STAKING SHALL ADHERE TO THE FOLLOWING GUIDELINES:
      a. 1"-2" TREES — TWO STAKES PER TREE
      b. 2-1/2"-4" TREES — THREE STAKES PER TREE
      c. TREES OVER 4" CALIPER — GUY AS NEEDED
      d. MULTI-TRUNK TREES — THREE STAKES PER TREE MINIMUM, QUANTITY AND POSITIONS AS NEEDED TO STABILIZE THE TREE
      e. MULTI-TRUNK TREES — THREE STAKES PER TREE MINIMUM, QUANTITY AND POSITIONS AS NEEDED TO STABILIZE THE TREE
   7. UPON COMPLETION OF PLANTING, CONSTRUCT AN EARTH WATERING BASIN AROUND THE TREE. COVER THE INTERIOR OF THE TREE RING WITH THE WEED BARRIER CLOTH AND TOPDRESS WITH MULCH (TYPE AND DEPTH PER PLANS).
E. SHRUB, PERENNIAL, AND GROUNDCOVER PLANTING
   1. DIG THE PLANTING HOLES TWICE AS WIDE AND 2" LESS DEEP THAN EACH PLANT'S ROOTBALL. INSTALL THE PLANT IN THE HOLE. BACKFILL AROUND THE PLANT WITH SOIL AMENDED PER SOIL TEST RECOMMENDATIONS.
   2. INSTALL THE WEED BARRIER CLOTH, OVERLAPPING IT AT THE ENDS. UTILIZE STEEL STAPLES TO KEEP THE WEED BARRIER CLOTH IN PLACE.
   3. WHEN PLANTING IS COMPLETE, INSTALL MULCH (TYPE AND DEPTH PER PLANS) OVER ALL PLANTING BEDS, COVERING THE ENTIRE PLANTING AREA.
F. SODDING
   1. SOD VARIETY TO BE AS SPECIFIED ON THE LANDSCAPE PLAN.
   2. LAY SOD WITHIN 24 HOURS FROM THE TIME OF STRIPPING. DO NOT LAY IF THE GROUND IS FROZEN.
   3. LAY THE SOD TO FORM A SOLID MASS WITH TIGHTLY FITTED JOINTS. BUTT ENDS AND SIDES OF SOD STRIPS - DO NOT OVERLAP. STAGGER STRIPS TO OFFSET JOINTS IN ADJACENT COURSES.
   4. ROLL THE SOD TO ENSURE GOOD CONTACT OF THE SOD'S ROOT SYSTEM WITH THE SOIL UNDERNEATH.
   5. WATER THE SOD THOROUGHLY WITH A FINE SPRAY IMMEDIATELY AFTER PLANTING TO OBTAIN AT LEAST SIX INCHES OF PENETRATION INTO THE SOIL BELOW THE SOD.
G. MULCH
   1. INSTALL MULCH TOPDRESSING, TYPE AND DEPTH PER MULCH NOTE, IN ALL PLANTING AREAS AND TREE RINGS.
   2. DO NOT INSTALL MULCH WITHIN 6" OF TREE ROOT FLARE AND WITHIN 24" OF HABITABLE STRUCTURES, EXCEPT AS MAY BE NOTED ON THESE PLANS. MULCH COVER WITHIN 6" OF CONCRETE WALKS AND CURBS SHALL NOT PROTRUDE ABOVE THE FINISH SURFACE OF THE WALKS AND CURBS. MULCH COVER WITHIN 12" OF WALLS SHALL BE AT LEAST 3" LOWER THAN THE TOP OF WALL.
H. CLEAN UP
   1. DURING LANDSCAPE PREPARATION AND PLANTING, KEEP ALL PAVEMENT CLEAN AND ALL WORK AREAS IN A NEAT, ORDERLY CONDITION.
   2. DISPOSED LEGALLY OF ALL EXCAVATED MATERIALS OFF THE PROJECT SITE.
I. INSPECTION AND ACCEPTANCE
   1. UPON COMPLETION OF THE WORK, THE LANDSCAPE CONTRACTOR SHALL PROVIDE THE SITE CLEAN, FREE OF DEBRIS AND TRASH, AND SUITABLE FOR USE AS INTENDED. THE LANDSCAPE CONTRACTOR SHALL THEN REQUEST AN INSPECTION BY THE OWNER TO DETERMINE FINAL ACCEPTABILITY.
   2. WHEN THE INSPECTED PLANTING WORK DOES NOT COMPLY WITH THE CONTRACT DOCUMENTS, THE LANDSCAPE CONTRACTOR SHALL REPLACE AND/OR REPAIR THE REJECTED WORK TO THE OWNER'S SATISFACTION WITHIN 24 HOURS.
   3. THE LANDSCAPE MAINTENANCE PERIOD WILL NOT COMMENCE UNTIL THE LANDSCAPE WORK HAS BEEN RE-INSPECTED BY THE OWNER AND FOUND TO BE ACCEPTABLE. AT THAT TIME, A WRITTEN NOTICE OF FINAL ACCEPTANCE WILL BE ISSUED BY THE OWNER, AND THE MAINTENANCE AND GUARANTEE PERIODS WILL COMMENCE.
J. LANDSCAPE MAINTENANCE
   1. THE LANDSCAPE CONTRACTOR SHALL BE RESPONSIBLE FOR THE MAINTENANCE OF ALL WORK SHOWN ON THESE PLANS FOR 90 DAYS BEYOND FINAL ACCEPTANCE OF ALL LANDSCAPE WORK BY THE OWNER. LANDSCAPE MAINTENANCE SHALL INCLUDE WEEKLY SITE VISITS FOR THE FOLLOWING ACTIONS (AS APPROPRIATE): PROPER PRUNING, RESTAKING OF TREES, RESETTING OF PLANTS THAT HAVE SETTLED, MOWING AND AERATION OF LAWNS, WEEDING, TREATING FOR INSECTS AND DISEASES,REPLACEMENT OF MULCH, REMOVAL OF LITTER, REPAIRS TO THE IRRIGATION SYSTEM DUE TO FAULTY PARTS AND/OR WORKMANSHIP, AND THE APPROPRIATE WATERING OF ALL PLANTINGS. THE LANDSCAPE CONTRACTOR SHALL MAINTAIN THE IRRIGATION SYSTEM IN PROPER WORKING ORDER, WITH SCHEDULING ADJUSTMENTS BY SEASON TO MAXIMIZE WATER CONSERVATION.
   2. SHOULD SEEDED AND/OR SODDED AREAS NOT BE COVERED BY AN AUTOMATIC IRRIGATION SYSTEM, THE LANDSCAPE CONTRACTOR SHALL BE RESPONSIBLE FOR WATERING THESE AREAS AND OBTAINING A FULL, HEALTHY STAND OF PLANTS AT NO ADDITIONAL COST TO THE OWNER.
   3. TO ACHIEVE FINAL ACCEPTANCE AT THE END OF THE MAINTENANCE PERIOD, ALL OF THE FOLLOWING CONDITIONS MUST OCCUR:
      a. THE LANDSCAPE SHALL SHOW ACTIVE, HEALTHY GROWTH (WITH EXCEPTIONS MADE FOR SEASONAL DORMANCY). ALL PLANTS NOT MEETING THIS CONDITION SHALL BE REJECTED AND REPLACED BY HEALTHY PLANT MATERIAL PRIOR TO FINAL ACCEPTANCE.
      b. ALL HARDSCAPE SHALL BE CLEANED PRIOR TO FINAL ACCEPTANCE.
      c. SODDED AREAS MUST BE ACTIVELY GROWING AND MUST REACH A MINIMUM HEIGHT OF 1 1/2 INCHES BEFORE FIRST MOWING. BARE AREAS LARGER THAN TWELVE SQUARE INCHES MUST BE RESODDED (AS APPROPRIATE) PRIOR TO FINAL ACCEPTANCE. ALL SODDED TURF SHALL BE NEATLY MOWED.
K. WARRANTY PERIOD, PLANT GUARANTEE AND REPLACEMENTS
   1. THE LANDSCAPE CONTRACTOR SHALL GUARANTEE ALL TREES, SHRUBS, PERENNIALS, SOD, AND IRRIGATION SYSTEMS FOR A PERIOD OF ONE YEAR FROM THE DATE OF THE OWNER'S FINAL ACCEPTANCE (90 DAYS FOR ANNUAL PLANTS). THE CONTRACTOR SHALL REPLACE, AT HIS OWN EXPENSE AND TO THE SATISFACTION OF THE OWNER, ANY PLANTS WHICH DIE IN THAT TIME, OR REPAIR ANY PORTIONS OF THE IRRIGATION SYSTEM WHICH OPERATE IMPROPERLY.
   2. AFTER THE INITIAL MAINTENANCE PERIOD AND DURING THE GUARANTEE PERIOD, THE LANDSCAPE CONTRACTOR SHALL ONLY BE RESPONSIBLE FOR REPLACEMENT OF PLANTS WHEN PLANT DEATH CANNOT BE ATTRIBUTED DIRECTLY TO OVERWATERING OR OTHER DAMAGE BY HUMAN ACTIONS.
L. PROVIDE A MINIMUM OF (2) COPIES OF RECORD DRAWINGS TO THE OWNER UPON COMPLETION OF WORK. A RECORD DRAWING IS A RECORD OF ALL CHANGES THAT OCCURRED IN THE FIELD AND THAT ARE DOCUMENTED THROUGH CHANGE ORDERS, ADDENDA, OR CONTRACTOR/CONSULTANT DRAWING MARKUPS.

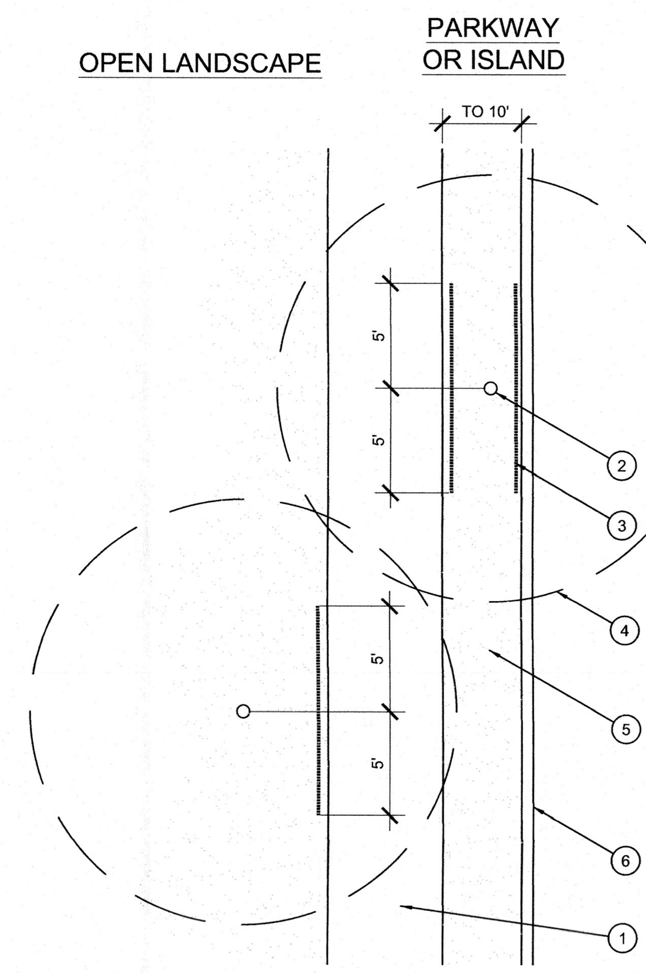

1. TYPICAL WALKWAY OR PAVING
2. TREE TRUNK
3. LINEAR ROOT BARRIER MATERIAL. SEE PLANTING NOTES FOR TYPE AND MANUFACTURER. INSTALL PER MANUFACTURER'S SPECIFICATIONS.
4. TREE CANOPY
5. TYPICAL PLANTING AREA
6. TYPICAL CURB AND GUTTER

NOTES:
1) INSTALL ROOT BARRIERS NEAR ALL NEWLY-PLANTED TREES THAT ARE LOCATED WITHIN FIVE (5) FEET OF PAVING OR CURBS.
2) BARRIERS SHALL BE LOCATED IMMEDIATELY ADJACENT TO HARDSCAPE. UNDER NO CIRCUMSTANCES SHALL THE CONTRACTOR USE ROOT BARRIERS OF A TYPE THAT COMPLETELY ENCIRCLE THE ROOTBALL.

D ROOT BARRIER - PLAN VIEW
SCALE: NOT TO SCALE

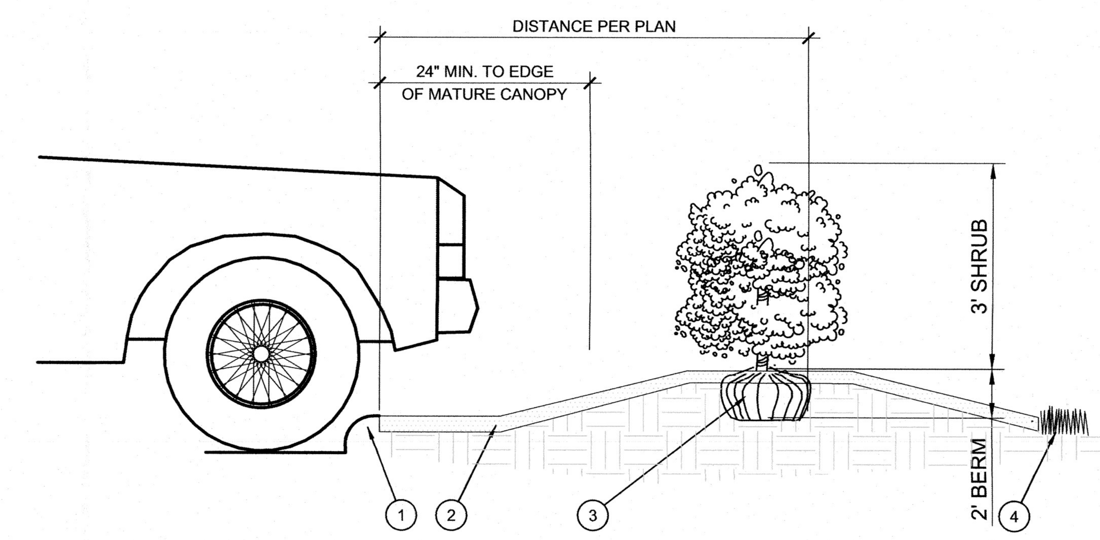

1. CURB.
2. MULCH LAYER.
3. PLANT.
4. TURF (WHERE SHOWN ON PLAN).

E PLANTING AT PARKING AREA
SCALE: NOT TO SCALE

IRRIGATION CONCEPT

1. AN AUTOMATIC IRRIGATION SYSTEM SHALL BE INSTALLED AND OPERATIONAL BY THE TIME OF FINAL INSPECTION. THE ENTIRE IRRIGATION SYSTEM SHALL BE INSTALLED BY A LICENSED AND QUALIFIED IRRIGATION CONTRACTOR.
2. THE IRRIGATION SYSTEM WILL OPERATE ON POTABLE WATER, AND THE SYSTEM WILL HAVE APPROPRIATE BACKFLOW PREVENTION DEVICES INSTALLED TO PREVENT CONTAMINATION OF THE POTABLE SOURCE.
3. ALL NON-TURF PLANTED AREAS SHALL BE DRIP IRRIGATED. SODDED AND SEEDED AREAS SHALL BE IRRIGATED WITH SPRAY OR ROTOR HEADS AT 100% HEAD-TO-HEAD COVERAGE.
4. ALL PLANTS SHARING SIMILAR HYDROZONE CHARACTERISTICS SHALL BE PLACED ON A VALVE DEDICATED TO PROVIDE THE NECESSARY WATER REQUIREMENTS SPECIFIC TO THAT HYDROZONE.
5. THE IRRIGATION SYSTEM SHALL BE DESIGNED AND INSTALLED, TO THE MAXIMUM EXTENT POSSIBLE, TO CONSERVE WATER BY USING THE FOLLOWING DEVICES AND SYSTEMS: MATCHED PRECIPITATION RATE TECHNOLOGY ON ROTOR AND SPRAY HEADS (WHEREVER POSSIBLE), RAIN SENSORS, AND MULTI-PROGRAM COMPUTERIZED IRRIGATION CONTROLLERS FEATURING SENSORY INPUT CAPABILITIES.
6. ALL IRRIGATION SHALL MEET THE REQUIREMENTS OF THE CITY OF ROCKWALL'S UDC (SUBSECTION 05.04, OF ARTICLE 08)

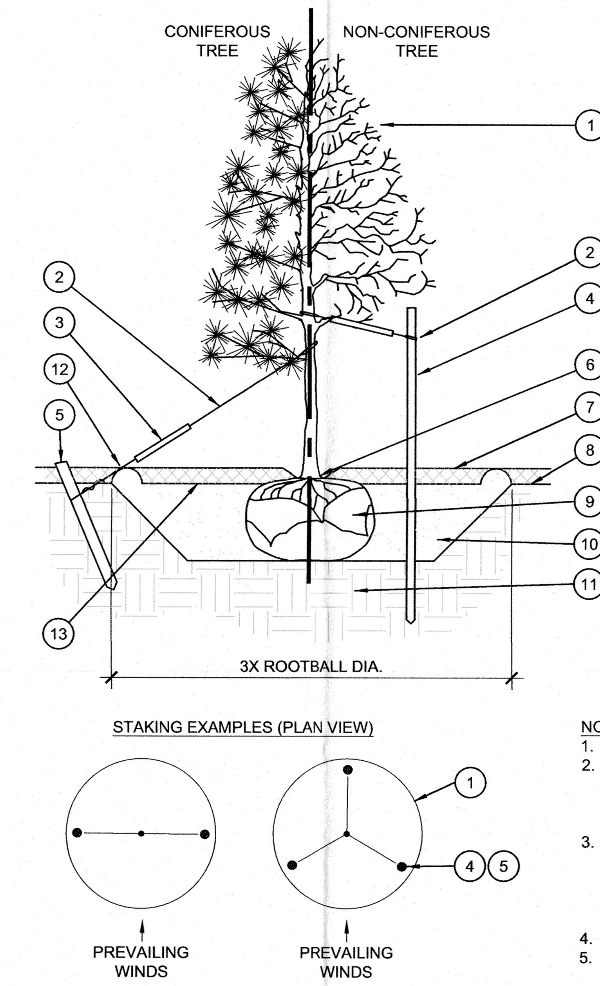

1. TREE CANOPY.
2. CINCH-TIES (24" BOX/2" CAL. TREES AND SMALLER) OR 12 GAUGE GALVANIZED WIRE WITH NYLON TREE STRAPS AT TREE AND STAKE (36" BOX/2.5" CAL. TREES AND LARGER). SECURE TIES OR STRAPS TO TRUNK JUST ABOVE LOWEST MAJOR BRANCHES.
3. 24" X 3/4" P.V.C. MARKERS OVER WIRES.
4. GREEN STEEL T-POSTS. EXTEND POSTS 12" MIN. INTO UNDISTURBED SOIL.
5. PRESSURE-TREATED WOOD DEADMAN, TWO PER TREE (MIN.). BURY OUTSIDE OF PLANTING PIT AND 18" MIN. INTO UNDISTURBED SOIL.
6. TRUNK FLARE.
7. MULCH, TYPE AND DEPTH PER PLANS. DO NOT PLACE MULCH WITHIN 6" OF TRUNK.
8. FINISH GRADE.
9. ROOT BALL.
10. BACKFILL. AMEND AND FERTILIZE ONLY AS RECOMMENDED IN SOIL FERTILITY ANALYSIS.
11. UNDISTURBED NATIVE SOIL.
12. 4" HIGH EARTHEN WATERING BASIN.
13. FINISH GRADE.

EVERGREEN
DESIGN GROUP
(800) 680-6630
15455 Dallas Pkwy, Ste 600
Addison, TX 75001
www.EvergreenDesignGroup.com

NOTES:
1. SCARIFY SIDES OF PLANTING PIT PRIOR TO SETTING TREE.
2. REMOVE EXCESS SOIL APPLIED ON TOP OF THE ROOTBALL THAT COVERS THE ROOT FLARE. THE PLANTING HOLE DEPTH SHALL BE SUCH THAT THE ROOTBALL RESTS ON UNDISTURBED SOIL, AND THE ROOT FLARE IS 2"-4" ABOVE FINISH GRADE.
3. FOR B&B TREES, CUT OFF BOTTOM 1/3 OF WIRE BASKET BEFORE PLACING TREE IN HOLE, CUT OFF AND REMOVE REMAINDER OF BASKET AFTER TREE IS SET IN HOLE, REMOVE ALL NYLON TIES, TWINE, ROPE, AND OTHER PACKING MATERIAL. REMOVE AS MUCH BURLAP FROM AROUND ROOTBALL AS IS PRACTICAL.
4. REMOVE ALL NURSERY STAKES AFTER PLANTING.
5. FOR TREES 36" BOX/2.5" CAL. AND LARGER, USE THREE STAKES OR DEADMEN (AS APPROPRIATE), SPACED EVENLY AROUND TREE.
6. STAKING SHALL BE TIGHT ENOUGH TO PREVENT TRUNK FROM BENDING, BUT LOOSE ENOUGH TO ALLOW SOME TRUNK MOVEMENT IN WIND.

A TREE PLANTING
SCALE: NOT TO SCALE

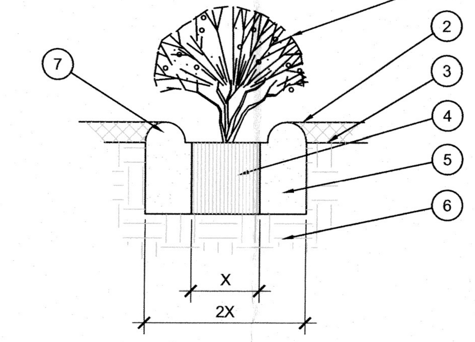

1. SHRUB, PERENNIAL, OR ORNAMENTAL GRASS.
2. MULCH, TYPE AND DEPTH PER PLANS. PLACE NO MORE THAN 1" OF MULCH WITHIN 6" OF PLANT CENTER.
3. FINISH GRADE.
4. ROOT BALL.
5. BACKFILL. AMEND AND FERTILIZE ONLY AS RECOMMENDED IN SOIL FERTILITY ANALYSIS.
6. UNDISTURBED NATIVE SOIL.
7. 3" HIGH EARTHEN WATERING BASIN.

B SHRUB AND PERENNIAL PLANTING
SCALE: NTS

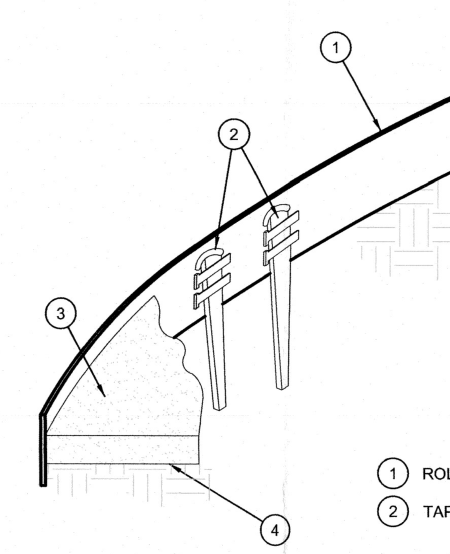

1. ROLLED-TOP STEEL EDGING PER PLANS.
2. TAPERED STEEL STAKES.
3. MULCH, TYPE AND DEPTH PER PLANS.
4. FINISH GRADE.

NOTES:
1) INSTALL EDGING SO THAT STAKES WILL BE ON INSIDE OF PLANTING BED.
2) BOTTOM OF EDGING SHALL BE BURIED A MINIMUM OF 1" BELOW FINISH GRADE.
3) TOP OF MULCH SHALL BE 1" LOWER THAN TOP OF EDGING.

C STEEL EDGING
SCALE: NOT TO SCALE

APPROVED:
I HEREBY CERTIFY THAT THE ABOVE AND FOREGOING SITE PLAN FOR A DEVELOPMENT IN THE CITY OF ROCKWALL, TEXAS, WAS APPROVED BY THE PLANNING & ZONING COMMISSION OF THE CITY OF ROCKWALL ON THE 13th DAY OF Sept. , 2022

WITNESS OUR HANDS, THIS 15th DAY OF March , 2023.

PLANNING & ZONING COMMISSION, CHAIRMAN — DIRECTOR OF PLANNING AND ZONING

NO.	DATE	REVISION

TEL: 214.295.5775
www.urbanstruct.com
URBAN STRUCTURE
8140 Walnut Hill Lane, Suite 905
Dallas, Texas 75231
Firm Registration #F-22252

REGISTERED LANDSCAPE ARCHITECT
DARCY R BRANDON
3423
STATE OF TEXAS
01/31/2023

PROJECT:
ADVANTAGE STORAGE
1701 STATE HIGHWAY 276
OUT OF THE JAMES M. ALLEN SURVEY, ABSTRACT NO. 2
CITY OF ROCKWALL, ROCKWALL COUNTY, TEXAS

SHEET TITLE:
PLANTING DETAILS & SPECS

PREPARED ON:	07/14/2022
CLIENT:	ADVANTAGE STORAGE
DRAWN BY:	LL
DESIGNER:	LL
REVIEWER:	BP
U.S. PROJECT:	22577

SHEET
LP-2

CITY CASE NO. ######

FILE NAME: ADVANTAGE STORAGE-ROCKWALL LP_2023-01-31.DWG
FILE LOCATION: C:\Users\darcy\Documents\DBLA_PROJECTS\2022\EDG\Advantage Storage - Rockwall, TX\Advantage Storage-Rockwall LP_2023-01-31.dwg
LAST MODIFIED ON: 1/31/2023 3:26 PM
PLOTTED ON: 1/31/2023 3:46 PM

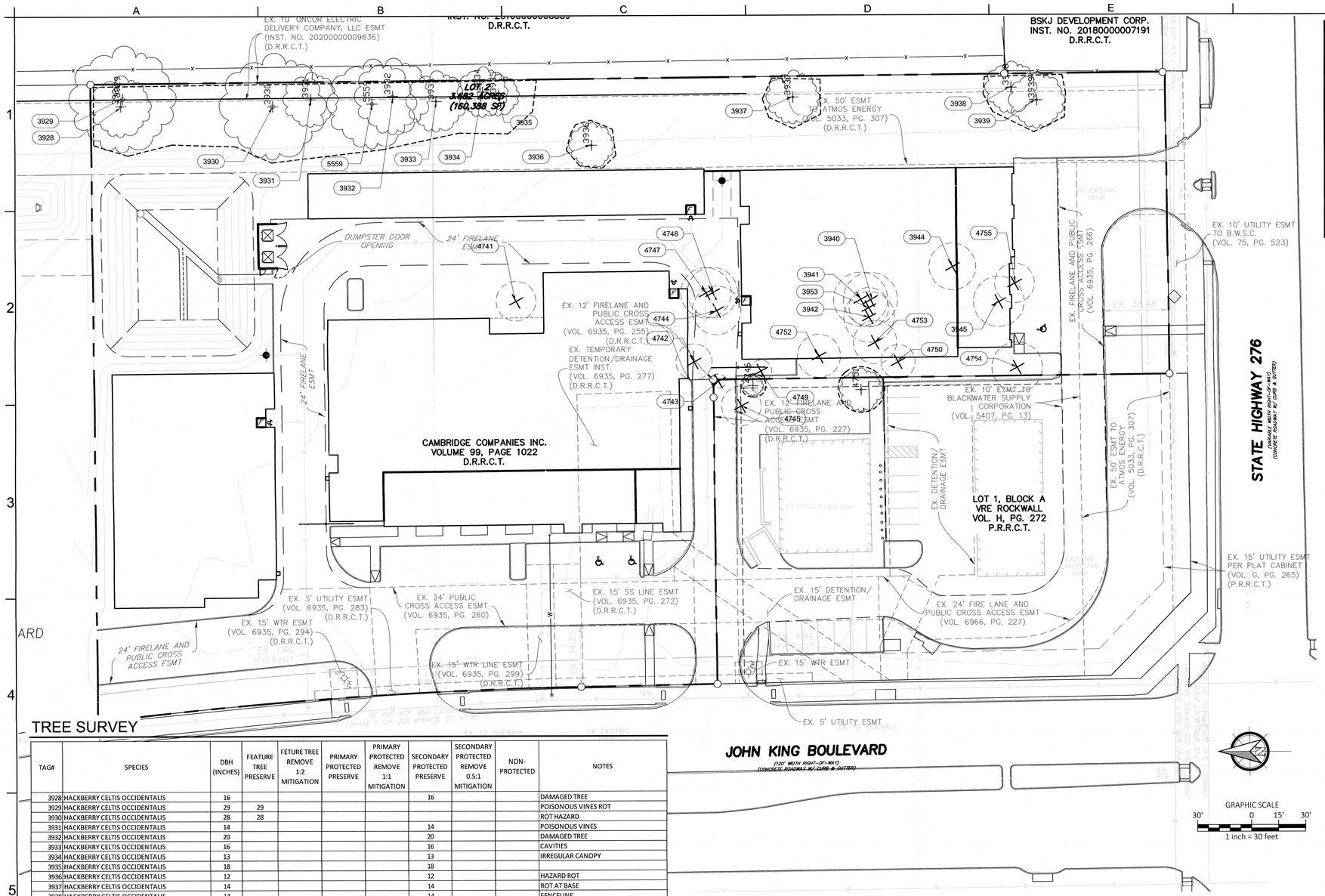

VICINITY MAP
(NOT TO SCALE)

EVERGREEN DESIGN GROUP
(800) 680-6630
15455 Dallas Pkwy., Ste 600
Addison, TX 75001
www.EvergreenDesignGroup.com

LEGEND

- TREE TAG NUMBER
- EXISTING TREES TO BE PROTECTED IN PLACE
- TREE PROTECTION FENCE
- TREE TAG NUMBER (XXXX)
- EXISTING TREES TO BE REMOVED

NOTE: TREE PROTECTION FOR ANY PRESERVED OR RELOCATED TREES MUST BE PROVIDED PER DETAILS AND SPECIFICATIONS ON SHEET TD-2. THESE MUST BE UP PRIOR TO THE COMMENCEMENT OF ANY WORK AND MAINTAINED THROUGHOUT CONSTRUCTION.

NOTE: ALL TREE TRIMMING MUST BE APPROVED BY THE OWNER AND LOCAL JURISDICTION PRIOR TO COMMENCEMENT OF WORK. ALL TREE TRIMMING MUST BE DONE BY AN ISA CERTIFIED ARBORIST IN ACCORDANCE WITH LOCAL TREE PRESERVATION ORDINANCE.

SEE SHEET LP-1 FOR PROPOSED REPLACEMENT TREES FOR MITIGATION.

TREE SURVEY

TAG#	SPECIES	DBH (INCHES)	FEATURE TREE PRESERVE	FETURE TREE REMOVE 1:2 MITIGATION	PRIMARY PROTECTED PRESERVE	PRIMARY PROTECTED REMOVE 1:1 MITIGATION	SECONDARY PROTECTED PRESERVE	SECONDARY PROTECTED REMOVE 0.5:1 MITIGATION	NON-PROTECTED	NOTES
3928	HACKBERRY CELTIS OCCIDENTALIS	16					16			DAMAGED TREE
3929	HACKBERRY CELTIS OCCIDENTALIS	29	29							POISONOUS VINES ROT
3930	HACKBERRY CELTIS OCCIDENTALIS	28	28							ROT HAZARD
3931	HACKBERRY CELTIS OCCIDENTALIS	14					14			POISONOUS VINES
3932	HACKBERRY CELTIS OCCIDENTALIS	20					20			DAMAGED TREE
3933	HACKBERRY CELTIS OCCIDENTALIS	16					16			CAVITIES
3934	HACKBERRY CELTIS OCCIDENTALIS	13					13			IRREGULAR CANOPY
3935	HACKBERRY CELTIS OCCIDENTALIS	18					18			
3936	HACKBERRY CELTIS OCCIDENTALIS	12					12			HAZARD ROT
3937	HACKBERRY CELTIS OCCIDENTALIS	14					14			ROT AT BASE
3938	HACKBERRY CELTIS OCCIDENTALIS	14					14			FENCELINE
3939	HACKBERRY CELTIS OCCIDENTALIS	15					15			ROT
3940	HACKBERRY CELTIS OCCIDENTALIS	15						15		IRREGULAR CANOPY
3941	HACKBERRY CELTIS OCCIDENTALIS	15						15		CROWDED
3942	HACKBERRY CELTIS OCCIDENTALIS	14						14		IRREGULAR CANOPY
3944	HACKBERRY CELTIS OCCIDENTALIS	13						13		DECLINE
3945	HACKBERRY CELTIS OCCIDENTALIS	14						14		LEANING POISONOUS VINES
3953	HACKBERRY CELTIS OCCIDENTALIS	11						11		POISONOUS VINES IRREGULAR CANOPY
3953	HACKBERRY CELTIS OCCIDENTALIS	18						18		HAZARD ROT
4740	EASTERN RED CEDAR JUNIPEROUS VIRGINIANA	11						11		
4741	EASTERN RED CEDAR JUNIPEROUS VIRGINIANA	11						11		IRREGULAR CANOPY
4742	PEAR PYRUS CALLERYANA	10				10				IRREGULAR CANOPY TRUNKK DECAY
4743	HERCULES CLUB ZANTHOXYLUM CLAVAHERCULIS	4				4				
4744	EASTERN RED CEDAR JUNIPEROUS VIRGINIANA	13.5						13.5		
4745	HACKBERRY CELTIS OCCIDENTALIS	11						11		
4747	EASTERN RED CEDAR JUNIPEROUS VIRGINIANA	14						14		POISONOUS VINES
4748	EASTERN RED CEDAR JUNIPEROUS VIRGINIANA	14						14		IRREGULAR CANOPY POISONOUS VINES
4749	HONEY LOCUST	6							6	NON-PROTECTED TREE
4750	HONEY LOCUST	9.5							9.5	NON-PROTECTED TREE
4752	HONEY LOCUST	12							12	NON-PROTECTED TREE
4753	HACKBERRY CELTIS OCCIDENTALIS	12						12		BRIAR VINES
4754	HACKBERRY CELTIS OCCIDENTALIS	14						14		
4755	HACKBERRY CELTIS OCCIDENTALIS	11						11		IRREGULAR CANOPY POISONOUS VINES
5559	HACKBERRY CELTIS OCCIDENTALIS	24					24			ROT CAVITIES STINGING INSECTS
TOTALS		486	57	0	0	14	176	211.5	27.5	
1:2 MITIGATION				0						
1:1 MITIGATION						14				
0.5:1 MITIGATION								105.75		
TOTAL MITIGATION (INCHES)		119.75								

TREE MITIGATION SUMMARY

TOTAL MITIGATION REQUIRED:	119.75"
MITIGATION PROVIDED BY PLANTING	
4" CALIPER TREES (31) TO BE PLANTED ONSITE:	124.0"
MITIGATION PROVIDED BY PURCHASING PRESERVATION CREDITS (20% OF TOTAL):	0"
TOTAL MITIGATION PROVIDED:	124.0"

TREE SURVEY (CONT.)

TAG#	SPECIES	DBH	COMMENTS
4746	HONEY LOCUST	5.5	OFF SITE, TO REMAIN
4751	HACKBERRY CELTIS OCCIDENTALIS	11	OFF SITE, TO REMAIN

APPROVED:
I HEREBY CERTIFY THAT THE ABOVE AND FOREGOING SITE PLAN FOR A DEVELOPMENT IN THE CITY OF ROCKWALL, TEXAS, WAS APPROVED BY THE PLANNING & ZONING COMMISSION OF THE CITY OF ROCKWALL ON THE 13th DAY OF Sept., 2022

WITNESS OUR HANDS, THIS 15th DAY OF March, 2023

PLANNING & ZONING COMMISSION, CHAIRMAN

DIRECTOR OF PLANNING AND ZONING

SITE DATA TABLE

EXISTING USE:	VACANT	
PROPOSED USE:	MINI-WAREHOUSE & OFFICE SUITES	
EXISTING ZONING DISTRICT:	PLANNED DEVELOPMENT (PD-10)	
SITE AREA (LOT 2):	3.682 AC (160,388 SF)	
SITE AREA (LOT 3):	2.565 AC (111,719 SF)	
TOTAL SITE AREA:	6.247 AC (272,107 SF)	
FOR LOT 2 ONLY		
BUILDING AREA	MINI-WAREHOUSE	OFFICE SUITES
BUILDING A (3 STORIES):	69,250 SF	4,400 SF
BUILDING B (1 STORY):	11,350 SF	0 SF
BUILDING C (1 STORY):	4,000 SF	0 SF
BUILDING D (1 STORY):	13,100 SF	3,000 SF
TOTAL BUILDING AREA:	105,100 SF	
TOTAL BUILDING FOOTPRINT AREA:	56,000 SF	
TOTAL STORAGE UNITS:	635 UNITS	
	REQUIRED	PROVIDED
MAXIMUM LOT COVERAGE:	96,233 SF (60%)	56,000 SF (35%)
FLOOR TO AREA RATIO:	4:1	0.66:1
MAXIMUM BUILDING HEIGHT:	60 FT	42 FT
LANDSCAPE AREA:	32,078 SF (20%)	58,982 SF (36.8%)
	MINI-WAREHOUSE	OFFICE SUITES
PARKING REQUIRED:	9 STALLS (3 STALLS + 1/100 UNITS)	25 STALLS (1/300 SF)
TOTAL PARKING REQUIRED:	34 STALLS	
TOTAL PARKING PROVIDED:	34 STALLS	
NOTE: PD-10 REQUIRES COMMERCIAL (C) ZONING STANDARDS TO BE FOLLOWED FOR A NON-RESIDENTIAL DEVELOPMENT.		

NO.	DATE	REVISION

TEL: 214.395.5775
www.urbanstruct.com
URBAN STRUCTURE
8140 Walnut Hill Lane, Suite 905
Dallas, Texas 75231
Firm Registration #F-22352

REGISTERED LANDSCAPE ARCHITECT
STACY R BRANNON
3423
STATE OF TEXAS
01/31/2023

PROJECT:

ADVANTAGE STORAGE
1701 STATE HIGHWAY 276
OUT OF THE JAMES M. ALLEN SURVEY, ABSTRACT NO. 2
CITY OF ROCKWALL, ROCKWALL COUNTY, TEXAS

SHEET TITLE:

TREESCAPE PLAN

PREPARED ON: 07/14/2022
CLIENT: ADVANTAGE STORAGE
DRAWN BY: LL
DESIGNER: LL
REVIEWER: BP
U.S. PROJECT: 22577

SHEET
TD-1

CITY CASE NO. ######

TREE PROTECTION SPECIFICATIONS

MATERIALS

1. FABRIC: 4 FOOT HIGH ORANGE PLASTIC FENCING AS SHOWN ON THE PLANS AND SHALL BE WOVEN WITH 2 INCH MESH OPENINGS SUCH THAT IN A VERTICAL DIMENSION OF 23 INCHES ALONG THE DIAGONALS OF THE OPENINGS THERE SHALL BE AT LEAST 7 MESHES.
2. POSTS: POSTS SHALL BE A MINIMUM OF 72 INCHES LONG AND STEEL 'T' SHAPED WITH A MINIMUM WEIGHT OF 1.3 POUNDS PER LINEAR FOOT.
3. TIE WIRE: WIRE FOR ATTACHING THE FABRIC TO THE T-POSTS SHALL BE NOT LESS THAN NO. 12 GAUGE GALVANIZED WIRE.
4. USED MATERIALS: PREVIOUSLY-USED MATERIALS, MEETING THE ABOVE REQUIREMENTS AND WHEN APPROVED BY THE OWNER, MAY BE USED.

CONSTRUCTION METHODS

1. ALL TREES AND SHRUBS SHOWN TO REMAIN WITHIN THE PROXIMITY OF THE CONSTRUCTION SITE SHALL BE PROTECTED PRIOR TO BEGINNING ANY DEVELOPMENT ACTIVITY.
2. EMPLOY THE SERVICES OF AN ISA (INTERNATIONAL SOCIETY OF ARBORICULTURE) CERTIFIED ARBORIST AND OBTAIN ALL REQUIRED PERMITS TO PRUNE THE EXISTING TREES FOR CLEANING, RAISING AND THINNING, AS MAY BE REQUIRED.
3. PROTECTIVE FENCING SHALL BE ERECTED OUTSIDE THE CRITICAL ROOT ZONE (CRZ, EQUAL TO 1' FROM THE TRUNK FOR EVERY 1" OF DBH) AT LOCATIONS SHOWN IN THE PLANS OR AS DIRECTED BY THE LANDSCAPE CONSULTANT AND/OR CITY ARBORIST, AND IN ACCORDANCE WITH THE DETAILS SHOWN ON THE PLANS. FENCING SHALL BE MAINTAINED AND REPAIRED BY THE CONTRACTOR DURING SITE CONSTRUCTION. TREES IN CLOSE PROXIMITY SHALL BE FENCED TOGETHER, RATHER THAN INDIVIDUALLY.
4. PROTECTIVE FENCE LOCATIONS IN CLOSE PROXIMITY TO STREET INTERSECTIONS OR DRIVES SHALL ADHERE TO THE APPLICABLE JURISDICTION'S SIGHT DISTANCE CRITERIA.
5. THE PROTECTIVE FENCING SHALL BE ERECTED BEFORE SITE WORK COMMENCES AND SHALL REMAIN IN PLACE DURING THE ENTIRE CONSTRUCTION PHASE.
6. THE INSTALLATION POSTS SHALL BE PLACED EVERY 6 FEET ON CENTER AND EMBEDDED TO 18 INCHES DEEP. MESH FABRIC SHALL BE ATTACHED TO THE INSTALLATION POSTS BY THE USE OF SUFFICIENT WIRE TIES TO SECURELY FASTEN THE FABRIC TO THE T-POSTS TO HOLD THE FABRIC IN A STABLE AND UPRIGHT POSITION.
7. WITHIN THE CRZ:
   a. DO NOT CLEAR, FILL OR GRADE IN THE CRZ OF ANY TREE.
   b. DO NOT STORE, STOCKPILE OR DUMP ANY JOB MATERIAL, SOIL OR RUBBISH UNDER THE SPREAD OF THE TREE BRANCHES.
   c. DO NOT PARK OR STORE ANY EQUIPMENT OR SUPPLIES UNDER THE TREE CANOPY.
   d. DO NOT SET UP ANY CONSTRUCTION OPERATIONS UNDER THE TREE CANOPY (SUCH AS PIPE CUTTING AND THREADING, MORTAR MIXING, PAINTING OR LUMBER CUTTING).
   e. DO NOT NAIL OR ATTACH TEMPORARY SIGNS METERS, SWITCHES, WIRES, BRACING OR ANY OTHER ITEM TO THE TREES.
   f. DO NOT PERMIT RUNOFF FROM WASTE MATERIALS INCLUDING SOLVENTS, CONCRETE WASHOUTS, ASPHALT TACK COATS (MC-30 OIL), ETC. TO ENTER THE CRZ. BARRIERS ARE TO BE PROVIDED TO PREVENT SUCH RUNOFF SUBSTANCES FROM ENTERING THE CRZ WHENEVER POSSIBLE, INCLUDING IN AN AREA WHERE RAIN OR SURFACE WATER COULD CARRY SUCH MATERIALS TO THE ROOT SYSTEM OF THE TREE.
8. ROUTE UNDERGROUND UTILITIES TO AVOID THE CRZ. IF DIGGING IS UNAVOIDABLE, BORE UNDER THE ROOTS, OR HAND DIG TO AVOID SEVERING THEM.
9. WHERE EXCAVATION IN THE VICINITY OF TREES MUST OCCUR, SUCH AS FOR IRRIGATION INSTALLATION, PROCEED WITH CAUTION, AND USING HAND TOOLS ONLY.
10. THE CONTRACTOR SHALL NOT CUT ROOTS LARGER THAN ONE INCH IN DIAMETER WHEN EXCAVATION OCCURS NEAR EXISTING TREES. ALL ROOTS LARGER THAN ONE INCH IN DIAMETER ARE TO BE CUT CLEANLY. FOR OAKS ONLY, ALL WOUNDS SHALL BE PAINTED WITH WOUND SEALER WITHIN 30 MINUTES
11. REMOVE ALL TREES, SHRUBS OR BUSHES TO BE CLEARED FROM PROTECTED ROOT ZONE AREAS BY HAND.
12. TREES DAMAGED OR KILLED DUE TO CONTRACTOR'S NEGLIGENCE DURING CONSTRUCTION SHALL BE MITIGATED AT THE CONTRACTOR'S EXPENSE AND TO THE PROJECT OWNER'S AND LOCAL JURISDICTION'S SATISFACTION.
13. ANY TREE REMOVAL SHALL BE APPROVED BY THE OWNER AND LOCAL JURISDICTION PRIOR TO ITS REMOVAL, AND THE CONTRACTOR SHALL HAVE ALL REQUIRED PERMITS FOR SUCH ACTIVITIES.
14. COVER EXPOSED ROOTS AT THE END OF EACH DAY WITH SOIL, MULCH OR WET BURLAP.
15. IN CRITICAL ROOT ZONE AREAS THAT CANNOT BE PROTECTED DUING CONSTRUCTION AND WHERE HEAVY TRAFFIC IS ANTICIPATED, COVER THE SOIL WITH EIGHT INCHES OF ORGANIC MULCH TO MINIMIZE SOIL COMPACTION. THIS EIGHT INCH DEPTH OF MULCH SHALL BE MAINTAINED THROUGHOUT CONSTRUCTION.
16. WATER ALL TREES IMPACTED BY CONSTRUCTION ACTIVITIES, DEEPLY ONCE A WEEK DURING PERIODS OF HOT DRY WEATHER. SPRAY TREE CROWNS WITH WATER PERIODICALLY TO REDUCE DUST ACCUMULATION ON THE LEAVES.
17. WHEN INSTALLING CONCRETE ADJACENT TO THE ROOT ZONE OF A TREE, USE A PLASTIC VAPOR BARRIER BEHIND THE CONCRETE TO PROHIBIT LEACHING OF LIME INTO THE SOIL.
18. CONTRACTOR SHALL REMOVE AND DISPOSE OF ALL TREE PROTECTION FENCING WHEN ALL THREATS TO THE EXISTING TREES FROM CONSTRUCTION-RELATED ACTIVITIES HAVE BEEN REMOVED.

TREE PROTECTION GENERAL NOTES

(A) PRIOR TO THE LAND CLEARING STAGE OF DEVELOPMENT, THE CONTRACTOR SHALL CLEARLY MARK ALL PROTECTED TREES FOR WHICH A TREE REMOVAL PERMIT HAS NOT BEEN ISSUED AND SHALL ERECT BARRIERS FOR THE PROTECTION OF THE TREES ACCORDING TO THE FOLLOWING:
(1) AROUND AN AREA AT OR GREATER THAN A SIX-FOOT RADIUS OF ALL SPECIES OF MANGROVES AND PROTECTED CABBAGE PALMS;
(2) AROUND AN AREA AT OR GREATER THAN THE FULL DRIPLINE OF ALL PROTECTED NATIVE PINES;
(3) AROUND AN AREA AT OR GREATER THAN TWO-THIRDS OF THE DRIPLINE OF ALL OTHER PROTECTED SPECIES.

(B) NO PERSON SHALL ATTACH ANY SIGN, NOTICE OR OTHER OBJECT TO ANY PROTECTED TREE OR FASTEN ANY WIRES, CABLES, NAILS OR SCREWS TO ANY PROTECTED TREE IN ANY MANNER THAT COULD PROVE HARMFUL TO THE PROTECTED TREE, EXCEPT AS NECESSARY IN CONJUNCTION WITH ACTIVITIES IN THE PUBLIC INTEREST.

(C) DURING THE CONSTRUCTION STAGE OF DEVELOPMENT, THE CONTRACTOR SHALL NOT CAUSE OR PERMIT THE CLEANING OF EQUIPMENT OR MATERIAL WITHIN THE OUTSIDE PERIMETER OF THE CROWN (DRIPLINE) OR ON THE NEARBY GROUND OF ANY TREE OR GROUP OF TREES WHICH IS TO BE PRESERVED. WITHIN THE OUTSIDE PERIMETER OF THE CROWN (DRIPLINE) OF ANY TREE OR ON NEARBY GROUND, THE CONTRACTOR SHALL NOT CAUSE OR PERMIT STORAGE OF BUILDING MATERIAL AND/OR EQUIPMENT, OR DISPOSAL OF WASTE MATERIAL SUCH AS PAINTS, OIL, SOLVENTS, ASPHALT, CONCRETE, MORTAR OR ANY OTHER MATERIAL HARMFUL TO THE LIFE OF THE TREE.

(D) NO PERSON SHALL PERMIT ANY UNNECESSARY FIRE OR BURNING WITHIN 30 FEET OF THE DRIPLINE OF A PROTECTED TREE.

(E) ANY LANDSCAPING ACTIVITIES WITHIN THE BARRIER AREA SHALL BE ACCOMPLISHED WITH HAND LABOR.

(F) PRIOR TO ISSUING A CERTIFICATE OF OCCUPANCY OR COMPLIANCE FOR ANY DEVELOPMENT, BUILDING OR STRUCTURE, ALL TREES DESIGNATED TO BE PRESERVED THAT WERE DESTROYED DURING CONSTRUCTION SHALL BE REPLACED BY THE CONTRACTOR WITH TREES OF EQUIVALENT DIAMETER AT BREAST HEIGHT TREE CALIPER AND OF THE SAME SPECIES AS SPECIFIED BY THE CITY ADMINISTRATOR, BEFORE OCCUPANCY OR USE, UNLESS APPROVAL FOR THEIR REMOVAL HAS BEEN GRANTED UNDER PERMIT.

(G) THE CITY ADMINISTRATOR MAY CONDUCT PERIODIC INSPECTIONS OF THE SITE DURING LAND CLEARANCE AND CONSTRUCTION.

(H) IF, IN THE OPINION OF THE CITY ADMINISTRATOR, DEVELOPMENT ACTIVITIES WILL SO SEVERELY STRESS SLASH PINES OR ANY OTHER PROTECTED TREE SUCH THAT THEY ARE MADE SUSCEPTIBLE TO INSECT ATTACK, PREVENTATIVE SPRAYING OF THESE TREES BY THE CONTRACTOR MAY BE REQUIRED.

TREES THAT ARE MARKED TO BE PRESERVED ON A SITE PLAN AND FOR WHICH UTILITIES MUST PASS TROUGH THEIR ROOT PROTECTION ZONES MAY REQUIRE TUNNELING AS OPPOSED TO OPEN TRENCHES. THE DECISION TO TUNNEL WILL BE DETERMINED ON A CASE BY CASE BASIS BY THE ENGINEER.

TUNNELS SHALL BE DUG THROUGH THE ROOT PROTECTION ZONE IN ORDER TO MINIMIZE ROOT DAMAGE.

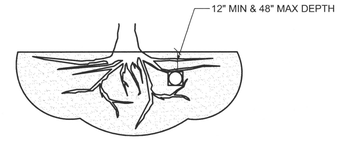

TUNNEL TO MINIMIZE ROOT DAMAGE (TOP) AS OPPOSED TO SURFACE-DUG TRENCHES IN ROOT PROTECTION ZONE WHEN THE 5' MINIMUM DISTANCE FROM TRUNK CAN NOT BE ACHIEVED.

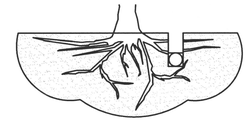

OPEN TRENCHING MAY BE USED IF EXPOSED TREE ROOTS DO NOT EXCEED 3" OR ROOTS CAN BE BENT BACK.

C BORING THROUGH ROOT PROTECTION ZONE
SCALE: NOT TO SCALE

NOTES
1. RETENTION AREAS WILL BE SET AS PART OF THE REVIEW PROCESS AND PRE-CONSTRUCTION MEETING.
2. BOUNDARIES OF RETENTION AREAS MUST BE STAKED AT THE PRE-CONSTRUCTION MEETING AND FLAGGED PRIOR TO ROOT PRUNING.
3. EXACT LOCATION OF ROOT PRUNING SHALL BE DETERMINED IN THE FIELD IN COORDINATION WITH THE FORESTRY INSPECTOR .
4. TRENCH SHOULD BE IMMEDIATELY BACKFILLED WITH EXCAVATED SOIL OR OTHER ORGANIC SOIL AS SPECIFIED PER PLAN OR BY THE FORESTRY INSPECTOR.
5. ROOTS SHALL BE CLEANLY CUT USING VIBRATORY KNIFE OR OTHER ACCEPTABLE EQUIPMENT. ROT PRUNING METHODS AND MEANS MUST BE IN ACCORDANCE WITH ANSI STANDARD A3000.
6. ALL PRUNING MUST BE EXECUTED AT LOD SHOWN ON PLANS OR AS AUTHORIZED IN WRITING BY THE FORESTRY INSPECTOR.
7. SUPPLEMENTAL WATERING MAY BE REQUIRED FOR ROOT PRUNED TREES THROUGHOUT THE GROWING SEASON DURING CONSTRUCTION AND SUBSEQUENT WARRANTY AND MAINTENANCE PERIOD.

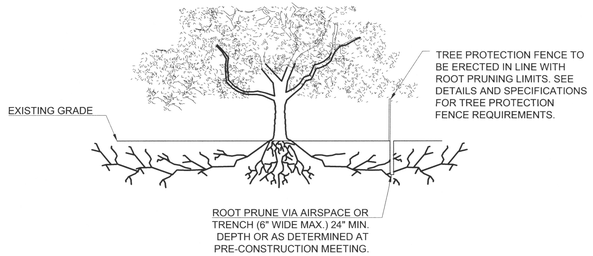

D ROOT PRUNING DETAIL
SCALE: NOT TO SCALE

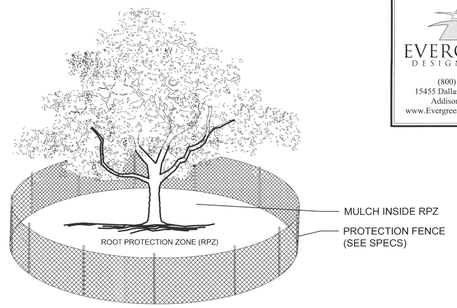

NOTES:
1. THE FENCING LOCATION SHOWN ABOVE IS DIAGRAMATIC ONLY AND WILL CONFORM TO THE DRIP LINE AND BE LIMITED TO PROJECT BOUNDARY. WHERE MULTIPLE ADJACENT TREES WILL BE ENCLOSED BY FENCING, THE FENCING SHALL BE CONTINUOUS AROUND ALL TREES.
2. FOR ACCEPTABLE FENCING MATERIALS SEE SPECIFICATIONS.

A TREE PROTECTION FENCE
SCALE: NOT TO SCALE

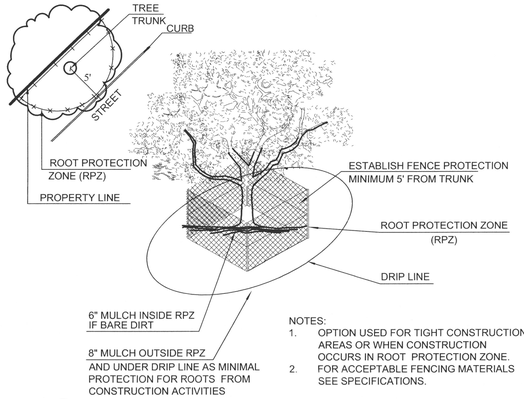

NOTES:
1. OPTION USED FOR TIGHT CONSTRUCTION AREAS OR WHEN CONSTRUCTION OCCURS IN ROOT PROTECTION ZONE.
2. FOR ACCEPTABLE FENCING MATERIALS SEE SPECIFICATIONS.

B TREE PROTECTION FENCE - TIGHT CONSTRUCTION
SCALE: NOT TO SCALE

APPROVED:
I HEREBY CERTIFY THAT THE ABOVE AND FOREGOING SITE PLAN FOR A DEVELOPMENT IN THE CITY OF ROCKWALL, TEXAS, WAS APPROVED BY THE PLANNING & ZONING COMMISSION OF THE CITY OF ROCKWALL ON THE 13th DAY OF Sept., 2022

WITNESS OUR HANDS, THIS 15th DAY OF March, 2023

PLANNING & ZONING COMMISSION, CHAIRMAN — DIRECTOR OF PLANNING AND ZONING

EVERGREEN DESIGN GROUP
(800) 680-6630
15455 Dallas Pkwy., Ste 600
Addison, TX 75001
www.EvergreenDesignGroup.com

NO.	DATE	REVISION

TEL: 214-295-5775
www.urbanstruct.com
URBAN STRUCTURE
8140 Walnut Hill Lane, Suite 905
Dallas, Texas 75231
Firm Registration #F-22252

REGISTERED LANDSCAPE ARCHITECT
NANCY R. BRANDON
3423
STATE OF TEXAS
01/31/2023

ADVANTAGE STORAGE
1701 STATE HIGHWAY 276
OUT OF THE JAMES M. ALLEN SURVEY, ABSTRACT NO. 2
CITY OF ROCKWALL, ROCKWALL COUNTY, TEXAS

TREESCAPE DETAILS & SPECS

PROJECT:
SHEET TITLE:

PREPARED ON: 07/14/2022
CLIENT: ADVANTAGE STORAGE
DRAWN BY: LL
DESIGNER: LL
REVIEWER: BP
U.S. PROJECT: 22577

SHEET
TD-2

CITY CASE NO. ######

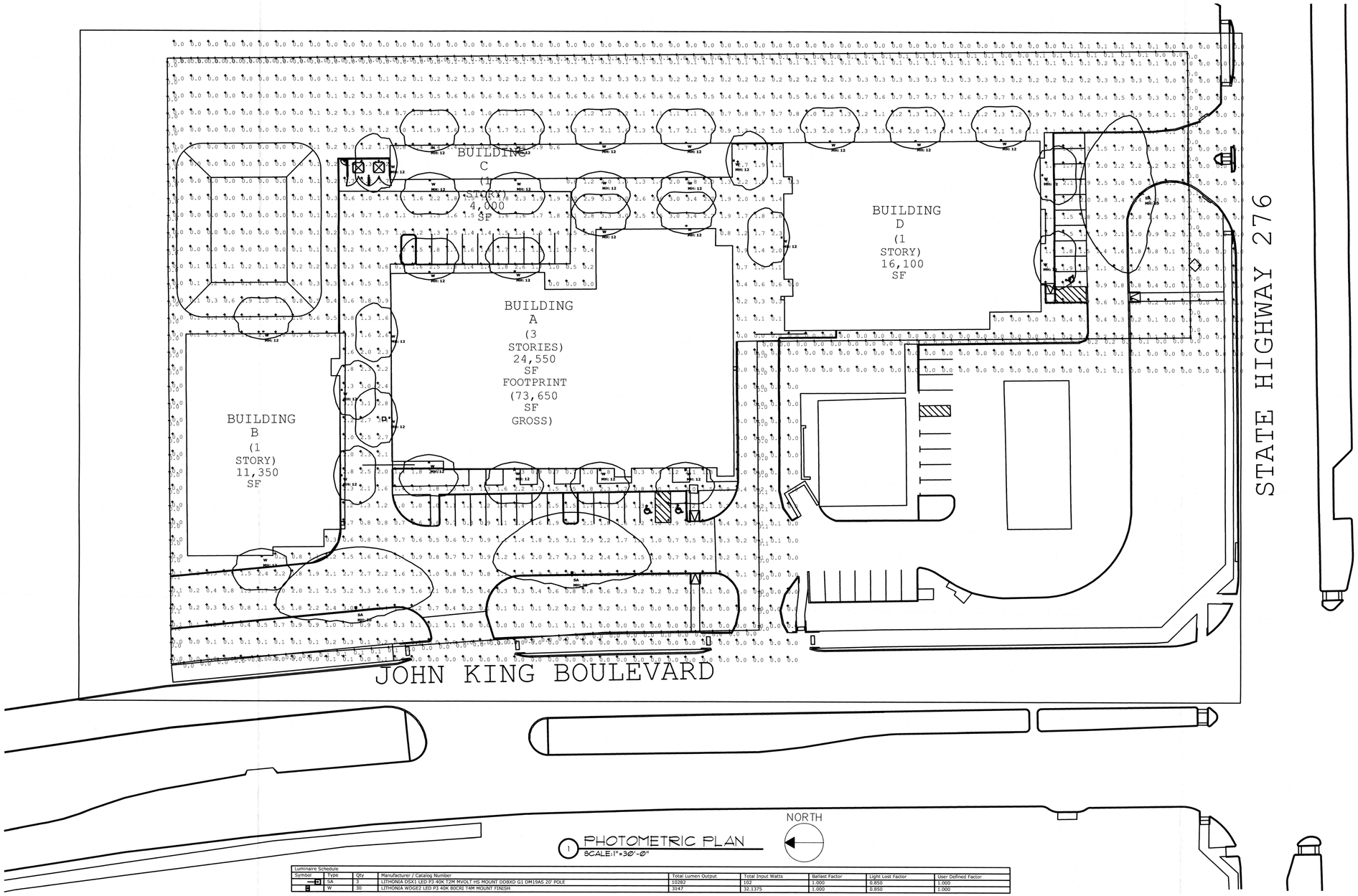

1 PHOTOMETRIC PLAN
SCALE: 1"=30'-0"

Luminaire Schedule								
Symbol	Type	Qty	Manufacturer / Catalog Number	Total Lumen Output	Total Input Watts	Ballast Factor	Light Lost Factor	User Defined Factor
	SA	3	LITHONIA DSX1 LED P3 40K T2M MVOLT HS MOUNT DDBXD G1 DM19AS 20' POLE	10282	102	1.000	0.850	1.000
	W	30	LITHONIA WDGE2 LED P3 40K 80CRI T4M MOUNT FINISH	3147	32.1375	1.000	0.850	1.000

Calculation Summary							
Calculation Grid Location	Calc. Height (Ft.)	Units	Avg	Max	Min	Avg/Min
PROPERTY LINE	N.A.	Fc	0.03	0.2	0.0	N.A.
PARKING ABC & DRIVEWAY		Fc	1.41	3.4	0.0	N.A.
PARKING D & DRIVEWAY		Fc	1.37	3.4	0.0	N.A.

PARKING ABC & DRIVEWAY

Illuminance (Fc)
Average = 1.41
Maximum = 3.4
Minimum = 0.0
Avg/Min Ratio = N.A.
Max/Min Ratio = N.A.

PARKING D & DRIVEWAY

Illuminance (Fc)
Average = 1.37
Maximum = 3.4
Minimum = 0.0
Avg/Min Ratio = N.A.
Max/Min Ratio = N.A.

APPROVED:
I hereby certify that the above and foregoing site plan for development in the City of Rockwall, Texas, was approved by the Planning & Zoning Commission on the 13th day of Sept., 2022.

Planning & Zoning Commission, Chairman

Director of Planning & Zoning

photometric plan

RES Real Engineering Services
Mechanical, Electrical & Plumbing Systems Consultant
4216 ROBIN'S PL GRAPEVINE, TX 76051
PHONE: 817-249-8609 FAX: 817-275-1434
TBAE FIRM #14848 TBAE LICENSE #: 15195
EMAIL: RES@RES-ENGINEERING.COM WEBSITE: RES-ENGINEERING.COM

BACA
100 NORTH TRAVIS STREET
SUITE NO.500
SHERMAN, TEXAS 75090
903.893.5800
www.BACA.team

50% DESIGN REVIEW
NOT FOR REGULATORY APPROVAL, PERMITTING, OR CONSTRUCTION

REVISIONS

NO.	DESCRIPTION	DATE
-	FOR REVIEW	1-3-2022

ADVANTAGE ROCKWALL
1701 STATE HIGHWAY 276
Rockwall, Tx
-

PROJECT NUMBER
-

DATE
12.27.22

SHEET NUMBER
PM1.0

DATE: February 13, 2025

TO: Brian Baca
2221 Lakeside Boulevard, Suite 1260
Richardson, Texas 75082

FROM: Bethany Ross
City of Rockwall Planning and Zoning Department
385 S. Goliad Street
Rockwall, TX 75087

SUBJECT: SP2025-001; *Amended Site Plan for Advantage Storage*

Brian,

This letter serves to notify you that the above referenced case (*i.e. Site Plan*) that you submitted for consideration by the City of Rockwall was approved by the Planning and Zoning Commission on February 11, 2025. The following is a record of all recommendations, voting records:

Planning and Zoning Commission
On January 28, 2025, the Planning and Zoning Commission approved a motion to table the Ameneded Site Plan by a vote of 4-0, with Commissioners Hustings, Conway, and Thompson absent.

On February 11, 2025, the Planning and Zoning Commission approved the Amended Site Plan by a vote of 7-0.

Should you have any questions or concerns regarding your zoning case, please feel free to contact me at (972) 772-6488.

Sincerely,

Bethany Ross, *Planner*
City of Rockwall Planning and Zoning Department

Outlook

RE: Follow-Up on Planning and Zoning Commission Discussion

From Brian Baca <bbaca@advconstruction.net>
Date Tue 2/4/2025 3:02 PM
To Ross, Bethany <bross@rockwall.com>
Cc Perry, William <wperry@rockwall.com>; Carter, Anthony <acarter@rockwall.com>

3 attachments (3 MB)

Bethany Ross 02.04.2025.pdf; Advantage Storage-Rockwall LP_2025-02-04-LP-1.pdf; Advantage Storage-Rockwall LP_2025-02-04-LP-2.pdf;

Bethany,

Attached is the revised LP-1, LP-2 and a letter from the Owner requesting approval of the amendment with a narrative of the compensatory measures. Let me know if you need anything else for this.

Brian Baca

From: Ross, Bethany <bross@rockwall.com>
Sent: Tuesday, February 4, 2025 10:01 AM
To: Brian Baca <bbaca@advconstruction.net>
Cc: Perry, William <wperry@rockwall.com>; Carter, Anthony <acarter@rockwall.com>
Subject: RE: Follow-Up on Planning and Zoning Commission Discussion

Okay, great. That should be fine to rearrange.

Thanks,
Bethany Ross
Planner
City of Rockwall
972.772.6488 Office
bross@rockwall.com
City of Rockwall - Planning & Zoning

From: Brian Baca <bbaca@advconstruction.net>
Sent: Tuesday, February 4, 2025 9:55 AM
To: Ross, Bethany <bross@rockwall.com>
Cc: Perry, William <wperry@rockwall.com>; Carter, Anthony <acarter@rockwall.com>
Subject: RE: Follow-Up on Planning and Zoning Commission Discussion

Bethany,

I'm expecting the plan shortly and will have a letter to go with it.

On a side note, our planter is wanting to move around some of the shrubs from the exact location on the plan for better aesthetics. As long as we have the proper number of plants and the correct mix of varieties to match the

matrix, and the plants are all in the same planting bed as shown, is there an issue with mixing them differently (rearranging) within the planting beds?

Brian Baca

From: Ross, Bethany <bross@rockwall.com>
Sent: Tuesday, February 4, 2025 9:37 AM
To: Brian Baca <bbaca@advconstruction.net>
Cc: Perry, William <wperry@rockwall.com>; Carter, Anthony <acarter@rockwall.com>
Subject: RE: Follow-Up on Planning and Zoning Commission Discussion

Brian,

I'm following up to see if you have the updated plan and letter ready. Could you send those over today? I need both to finalize your case memo.

Thanks,
Bethany Ross
Planner
City of Rockwall
972.772.6488 Office
bross@rockwall.com
City of Rockwall - Planning & Zoning

From: Brian Baca <bbaca@advconstruction.net>
Sent: Friday, January 31, 2025 2:46 PM
To: Ross, Bethany <bross@rockwall.com>
Cc: Perry, William <wperry@rockwall.com>; Carter, Anthony <acarter@rockwall.com>
Subject: Re: Follow-Up on Planning and Zoning Commission Discussion

Thanks Bethany. I'll get both over to you ASAP.

Brian Baca
Advantage Construction, LLC
(214) 308-5225 office

From: Ross, Bethany <bross@rockwall.com>
Sent: Friday, January 31, 2025 1:06:57 PM
To: Brian Baca <bbaca@advconstruction.net>
Cc: Perry, William <wperry@rockwall.com>; Carter, Anthony <acarter@rockwall.com>
Subject: RE: Follow-Up on Planning and Zoning Commission Discussion

Sounds great. Thanks so much! Just send me the finalized plan when you are done. I would also suggest writing a letter to the Planning and Zoning Commission explaining the updates.

Thank you,
Bethany Ross
Planner
City of Rockwall
972.772.6488 Office
bross@rockwall.com
City of Rockwall - Planning & Zoning

From: Brian Baca <bbaca@advconstruction.net>
Sent: Thursday, January 30, 2025 2:14 PM
To: Ross, Bethany <bross@rockwall.com>
Cc: Perry, William <wperry@rockwall.com>; Carter, Anthony <acarter@rockwall.com>
Subject: RE: Follow-Up on Planning and Zoning Commission Discussion

Bethany,

I don't disagree that it's a tighter fit than optimal. To be clear, we're only adding two (2) trees to the west side of Building A. There are two (2) originally proposed (and approved) trees, that I proposed to shift over, and then two (2) added trees, one (1) per median. I spoke with the Landscape architect and he noted that it's not optimal to plant the trees on the side slope of the detention pond, but I responded that it's also not optimal to plant them as close as we had them in the parking area either. He agreed. I've proposed on the attached that we plant two (2) chinquapin oaks as they tend to be a little more water tolerant and we'll plant them high on the slope, just a few feet from the easement to keep them out of the area of regular standing water. I'm comfortable with this plan.

If you don't take issue, then I'll have the Landscape architect revise the plan with updated plant counts to resubmit for the next P&Z review.

Thank you for your support.

Brian Baca, *Principal*
***ADV*ANTAGE** CONSTRUCTION, LLC
2221 Lakeside Boulevard, Suite 1260
Richardson, Texas 75082
(214) 308-5225 x115

From: Ross, Bethany <bross@rockwall.com>
Sent: Thursday, January 30, 2025 1:45 PM
To: Brian Baca <bbaca@advconstruction.net>
Cc: Perry, William <wperry@rockwall.com>; Carter, Anthony <acarter@rockwall.com>
Subject: RE: Follow-Up on Planning and Zoning Commission Discussion

Hi Brian,

This is great. I do have a small suggestion regarding the four (4) canopy trees on the west side of Building A. I don't believe they will thrive in that location. Would it be possible to relocate those four (4) canopy trees to the north side of the detention area and, in turn, move four of the accent trees from the detention area to the west side of Building A? So basically swap those four trees locations. I believe this adjustment would provide a better chance for the trees to establish and thrive.

Let me know your thoughts.

Bethany Ross
Planner
City of Rockwall
972.772.6488 Office
bross@rockwall.com
City of Rockwall - Planning & Zoning

From: Brian Baca <bbaca@advconstruction.net>
Sent: Wednesday, January 29, 2025 6:30 PM
To: Ross, Bethany <bross@rockwall.com>
Cc: Perry, William <wperry@rockwall.com>; Carter, Anthony <acarter@rockwall.com>
Subject: Re: Follow-Up on Planning and Zoning Commission Discussion

Bethany,

I really appreciate your time on this. I am well aware that municipalities do not design on behalf of applicants, I have, however, always worked hand-in-hand with city planners and engineers on design issues because they know better than we do about what they're looking for and what tends to satisfy their desires. What we have going on right now with sharing of ideas is what I'm used to. I am also aware that this is no guarantee of approval and I always take that risk.

In working with the architect more closely, I've found areas to place the three (3) canopy trees and nine (9) ornamental trees. In the attached plan, I've more than doubled the low plantings along 276 and added an additional two (2) ornamental trees so that there'll be a "hedge" between the gas station parking lot and the west side of the building facing Hwy 276. This provides significant landscape buffer at the front of the building along Hwy 276, which is the intent of the overlay ordinance, as well as keeping all of the trees that cannot be planted in the buffer.

The three (3) canopy trees and nine (9) ornamental trees that are not being planted in the gas easement are worth about $5k, planted. We're keeping all of those and relocating them where we can squeeze them in. The value of the shrubs and ornamental grasses that we are proposing to add are valued at approximately $7.5k with required planting beds and drip irrigation, etc. The correction is more than double the value of the mistake. This seems to be generously compensatory in concept. Again, the Owner is not trying to get by with anything or "build whatever we want to build" and is continuing to act in good faith to correct this mistake. Does staff feel that this is a good faith effort in righting the wrong? Is there something else we should be looking at?

Let me know your thoughts on the attached as the Landscape architect is awaiting my direction.

Brian Baca, *Principal*
***ADV*ANTAGE** CONSTRUCTION, LLC
2221 Lakeside Boulevard, Suite 1260
Richardson, Texas 75082
(214) 308-5225 x115

From: Ross, Bethany <bross@rockwall.com>
Sent: Wednesday, January 29, 2025 11:32 AM
To: Brian Baca <bbaca@advconstruction.net>
Cc: Perry, William <wperry@rockwall.com>; Carter, Anthony <acarter@rockwall.com>
Subject: RE: Follow-Up on Planning and Zoning Commission Discussion

Brian,

I understand that you have extensive experience in construction, and I want to clarify our role in this process. Cities do not design projects on behalf of applicants; however, we took a few minutes to provide some suggestions to help guide you, as there seemed to be some confusion during last night's discussion.

Please note that while these recommendations take your easements into account, they do *not* guarantee approval. In addition, further compensatory measures may exist and be in your best interest to explore.

Bethany Ross

Planner
City of Rockwall
972.772.6488 Office
bross@rockwall.com
City of Rockwall - Planning & Zoning

From: Brian Baca <bbaca@advconstruction.net>
Sent: Wednesday, January 29, 2025 10:49 AM
To: Ross, Bethany <bross@rockwall.com>
Cc: Perry, William <wperry@rockwall.com>; Carter, Anthony <acarter@rockwall.com>
Subject: Re: Follow-Up on Planning and Zoning Commission Discussion

Thank you, Bethany. This is exactly the kind of feedback I need from Rockwall. I'm on a jobsite right now but have a meeting with the Landscape Architect at 2:30 today, so we'll discuss it and get back with you.

After last night, I was a little sore from the pummeling I took.

Brian Baca
Advantage Construction, LLC
(214) 308-5225 office

From: Ross, Bethany <bross@rockwall.com>
Sent: Wednesday, January 29, 2025 10:44:41 AM
To: Brian Baca <bbaca@advconstruction.net>
Cc: Perry, William <wperry@rockwall.com>; Carter, Anthony <acarter@rockwall.com>
Subject: Follow-Up on Planning and Zoning Commission Discussion

Brian,

Following last night's discussion with the Planning and Zoning Commission, we determined the following:

1. The required tree mitigation for the removal of four (4) canopy trees from the original site plan amounts to $1,200, calculated as follows:
   (4 canopy trees removed from plans × 4-inch caliper) × $100 per inch of mitigation.
   A check for this amount must be made payable to the City of Rockwall and will be required before a Certificate of Occupancy (CO) can be issued.
2. Attached are some recommendations for additional landscaping enhancements that may help support your request.

Please let me know if you need further clarification.

Thank you,
Bethany Ross
Planner
City of Rockwall
972.772.6488 Office
bross@rockwall.com
City of Rockwall - Planning & Zoning

From: Brian Baca <bbaca@advconstruction.net>
Sent: Tuesday, January 28, 2025 12:35 PM
To: Ross, Bethany <bross@rockwall.com>
Cc: Perry, William <wperry@rockwall.com>; Carter, Anthony <acarter@rockwall.com>
Subject: Re: Com2023-2932 Rockwall Storage Landscape Conflicts

Bethany,

I wanted to let you now that the Landscape Architect will not be able to make it as he is out of town this week. The individual who originally designed the original layout is no longer employed by the firm, so the Architect doesn't really know how we ended up with what we ended up with. I'll be there as the applicant. I hope that will work as it seems to be the best we can do.

Brian Baca, *Principal*

***ADV*ANTAGE** CONSTRUCTION, LLC

2221 Lakeside Boulevard, Suite 1260

Richardson, Texas 75082

(214) 308-5225 x115

From: Brian Baca <bbaca@advconstruction.net>
Sent: Friday, January 24, 2025 5:34 PM
To: Ross, Bethany <bross@rockwall.com>
Cc: Perry, William <wperry@rockwall.com>; Carter, Anthony <acarter@rockwall.com>
Subject: Re: Com2023-2932 Rockwall Storage Landscape Conflicts

Bethany,

I forgot one more attachment, which was the landscape plan that we originally sent to Atmos at their request. It is attached here.

Brian Baca, *Principal*

***ADV*ANTAGE** CONSTRUCTION, LLC

2221 Lakeside Boulevard, Suite 1260

Richardson, Texas 75082

(214) 308-5225 x115

From: Brian Baca <bbaca@advconstruction.net>
Sent: Friday, January 24, 2025 5:32 PM
To: Ross, Bethany <bross@rockwall.com>
Cc: Perry, William <wperry@rockwall.com>; Carter, Anthony <acarter@rockwall.com>
Subject: Re: Com2023-2932 Rockwall Storage Landscape Conflicts

Bethany,

Attached is a PDF version of the email thread between us and Atmos concerning the landscaping in the easement as well as the documents that were attached. Let me know if you need any further information.

Brian Baca, *Principal*

***ADV*ANTAGE** CONSTRUCTION, LLC

2221 Lakeside Boulevard, Suite 1260

Richardson, Texas 75082

(214) 308-5225 x115

From: Ross, Bethany <bross@rockwall.com>
Sent: Thursday, January 23, 2025 1:11 PM
To: Brian Baca <bbaca@advconstruction.net>
Cc: Perry, William <wperry@rockwall.com>; Carter, Anthony <acarter@rockwall.com>
Subject: RE: Com2023-2932 Rockwall Storage Landscape Conflicts

Brian,

The parks board does not review this case – only P&Z reviews this case on January 28. I never mentioned anything about the Parks Board or February 4th. Only that an amended site plan usually takes two weeks (January 17 [submittal date]-January 28[Planning and Zoning meeting]). I would have the landscape architect there and send me any written communication between you and Atmos so I can add that to the Planning and Zoning Commission's packet.

Thank you,
Bethany Ross
Planner
City of Rockwall
972.772.6488 Office
bross@rockwall.com
City of Rockwall - Planning & Zoning

From: Brian Baca <bbaca@advconstruction.net>
Sent: Thursday, January 23, 2025 7:33 AM
To: Ross, Bethany <bross@rockwall.com>
Cc: Perry, William <wperry@rockwall.com>; Carter, Anthony <acarter@rockwall.com>
Subject: Re: Com2023-2932 Rockwall Storage Landscape Conflicts

Bethany,

I need some clarity on the variance/amended landscape portion of the Site Plan process. There is a P&Z work session on January 28th, at which I will be in attendance to present for the Owner, to review the requested amendment/variance to the landscape buffer requirement along Hwy 276. If I recall correctly, you mentioned in a voice mail to me that this could be approved by February 4th. Is this variance going to be approved by the Parks Board that meets on that date, or does it require approval by the P&Z board that meets on the 11th.

I plan to be at all meetings to present the case and answer questions. Is it wise to have the landscape architect there, or will the questions be limited to purpose and not landscaping details?

Brian Baca, *Principal*

***ADV*ANTAGE** CONSTRUCTION, LLC

2221 Lakeside Boulevard, Suite 1260

Richardson, Texas 75082

(214) 308-5225 x115

From: Brian Baca
Sent: Friday, January 17, 2025 4:13 PM
To: Ross, Bethany <bross@rockwall.com>
Cc: Perry, William <wperry@rockwall.com>; Carter, Anthony <acarter@rockwall.com>
Subject: RE: Com2023-2932 Rockwall Storage Landscape Conflicts

Bethany,

Thank you so much for your help in this matter. You should have received the application for the landscape variance. I plan to attend the P&Z work session to make sure we can satisfy them with this matter. Concerning the RTU, it is getting relocated to the interior of the building so that it's no longer visible. That will be completed before we request a TCO or CO. The other items will all be addressed as part of normal CO procedures.

Brian Baca, *Principal*
***ADV*ANTAGE** CONSTRUCTION, LLC
2221 Lakeside Boulevard, Suite 1260
Richardson, Texas 75082
(214) 308-5225 x115

From: Ross, Bethany <bross@rockwall.com>
Sent: Friday, January 17, 2025 10:00 AM
To: Brian Baca <bbaca@advconstruction.net>
Cc: Perry, William <wperry@rockwall.com>; Carter, Anthony <acarter@rockwall.com>
Subject: RE: Com2023-2932 Rockwall Storage Landscape Conflicts

Hi Brian,
I'm following up on the voicemail I left earlier. Before I can approve a TCO, the following steps need to be completed:

1. Submit an application for the landscaping variance.
2. Address all outstanding items or inspections with Building and Engineering.
3. Place an order for the louvers for the visible RTU.
4. Apply for a Certificate of Occupancy (CO) and a Temporary Certificate of Occupancy (TCO).

Please let me know if you have any questions or need clarification on any of these steps.
Thank you,
Bethany Ross
Planner
City of Rockwall
972.772.6488 Office
bross@rockwall.com
City of Rockwall - Planning & Zoning

From: Brian Baca <bbaca@advconstruction.net>
Sent: Thursday, January 16, 2025 2:27 PM

To: Ross, Bethany <bross@rockwall.com>
Cc: Perry, William <wperry@rockwall.com>; Carter, Anthony <acarter@rockwall.com>
Subject: RE: Com2023-2932 Rockwall Storage Landscape Conflicts

Thank you, Bethany. So, as I understand your response, if the Owner submits a revised landscaping plan requesting a variance, the current approved landscape plan will be nullified and the inspector will not be able to perform an inspection until the changes are approved. Is this a correct understanding?

Brian Baca, *Principal*
***ADV*ANTAGE** CONSTRUCTION, LLC
2221 Lakeside Boulevard, Suite 1260
Richardson, Texas 75082
(214) 308-5225 x115

From: Ross, Bethany <bross@rockwall.com>
Sent: Thursday, January 16, 2025 11:00 AM
To: Brian Baca <bbaca@advconstruction.net>
Cc: Perry, William <wperry@rockwall.com>; Carter, Anthony <acarter@rockwall.com>
Subject: RE: Com2023-2932 Rockwall Storage Landscape Conflicts

Brian,

You will be submitting for an amended site plan so yes, it will change the required landscaping for the development as you will be requesting a variance to the landscaping.

Thank you,
Bethany Ross
Planner
City of Rockwall
972.772.6488 Office
bross@rockwall.com
City of Rockwall - Planning & Zoning

From: Brian Baca <bbaca@advconstruction.net>
Sent: Thursday, January 16, 2025 8:54 AM
To: Ross, Bethany <bross@rockwall.com>
Cc: Perry, William <wperry@rockwall.com>; Carter, Anthony <acarter@rockwall.com>
Subject: RE: Com2023-2932 Rockwall Storage Landscape Conflicts

Bethany,

I never received a response to my question below. If we submit for a landscape revision by tomorrow, will the review of the impending revisions change the status of the currently approved Site Plan as it relates to final inspections and occupancy status?

Brian Baca, *Principal*
***ADV*ANTAGE** CONSTRUCTION, LLC
2221 Lakeside Boulevard, Suite 1260
Richardson, Texas 75082
(214) 308-5225 x115

From: Brian Baca
Sent: Tuesday, January 7, 2025 4:05 PM
To: Ross, Bethany <bross@rockwall.com>

Cc: Perry, William <wperry@rockwall.com>; Carter, Anthony <acarter@rockwall.com>
Subject: RE: Com2023-2932 Rockwall Storage Landscape Conflicts

Bethany,

Thank you for the information. I wish there were some accommodations for the developer who is acting in good faith, but at least we have the information and know how to move forward. If we submit for a Site Plan revision next Friday, will the impending revision change the status of the currently approved Site Plan as it relates to final inspections and occupancy status?

Concerning the rooftop condenser units that are visible, it will be corrected so that it is no longer visible. Thank you for the notice as that gives us time to address the issue.

Brian Baca, *Principal*
***ADV*ANTAGE** CONSTRUCTION, LLC
2221 Lakeside Boulevard, Suite 1260
Richardson, Texas 75082
(214) 308-5225 x115

From: Ross, Bethany <bross@rockwall.com>
Sent: Tuesday, January 7, 2025 2:41 PM
To: Brian Baca <bbaca@advconstruction.net>
Cc: Perry, William <wperry@rockwall.com>; Carter, Anthony <acarter@rockwall.com>
Subject: RE: Com2023-2932 Rockwall Storage Landscape Conflicts

Hello Brian,

I spoke with my Director regarding your inquiry, and we cannot facilitate an escrow. As a result, we cannot issue a Temporary Certificate of Occupancy (TCO) until the required landscaping has been installed in accordance with the approved landscape plan. If you choose to install the landscaping now and Atmos subsequently removes it, we will be obligated to issue zoning violations until the landscaping is restored to compliance or a variance has been granted by the Planning and Zoning Commission. As a reminder, the next submittal is next Friday, January 17, 2025.

Additionally, upon visiting your building, we observed that the rooftop units are visible from the public right-of-way. This must be addressed—such as through the installation of louvered screening—before the Planning Department can issue a Certificate of Occupancy. Please see the attached documentation for further details.

Thank you,
Bethany Ross
Planner
City of Rockwall
972.772.6488 Office
bross@rockwall.com
City of Rockwall - Planning & Zoning

From: Brian Baca <bbaca@advconstruction.net>
Sent: Friday, January 3, 2025 9:08 AM
To: Ross, Bethany <bross@rockwall.com>
Subject: RE: Com2023-2932 Rockwall Storage Landscape Conflicts

Bethany,

I'm following up on the possible escrow below.

Brian Baca, *Principal*

***ADV*ANTAGE** CONSTRUCTION, LLC
2221 Lakeside Boulevard, Suite 1260
Richardson, Texas 75082
(214) 308-5225 x115

From: Brian Baca
Sent: Tuesday, December 31, 2024 11:44 AM
To: bross@rockwall.com
Subject: RE: Com2023-2932 Rockwall Storage Landscape Conflicts

Bethany,

Thank you for the phone call yesterday. Let me know if there's an option for some type of escrow for the owner/developer for the section of plantings that are in the buffer along 276. Otherwise, we'll proceed as originally planned so that all plants are in compliance with the approved Site Plan.

Brian Baca, *Principal*
***ADV*ANTAGE** CONSTRUCTION, LLC
2221 Lakeside Boulevard, Suite 1260
Richardson, Texas 75082
(214) 308-5225 x115

From: Brian Baca
Sent: Monday, December 30, 2024 4:21 PM
To: bross@rockwall.com
Subject: FW: Com2023-2932 Rockwall Storage Landscape Conflicts

Bethany,

Please contact me regarding the landscaping. We're nearly ready to install per plans, so I had a few questions about compliance. You may call me at the number below. Thank you.

Brian Baca, *Principal*
***ADV*ANTAGE** CONSTRUCTION, LLC
2221 Lakeside Boulevard, Suite 1260
Richardson, Texas 75082
(214) 308-5225 x115

From: Jon Harris <jharris@advconstruction.net>
Sent: Monday, December 30, 2024 10:32 AM
To: Brian Baca <bbaca@advconstruction.net>
Subject: FW: Com2023-2932 Rockwall Storage Landscape Conflicts

Jon Harris, *Project Manager*
***ADV*ANTAGE** CONSTRUCTION, LLC
2221 Lakeside Blvd, Suite 1260
Richardson,Texas 75082
Office: (214) 308-5225 **Ext 9102#**
Mobile: (214) 868-3389

From: Ross, Bethany <bross@rockwall.com>
Sent: Wednesday, December 18, 2024 2:52 PM
To: Jon Harris <jharris@advconstruction.net>

Cc: Matt Isch <misch@advconstruction.net>
Subject: RE: Com2023-2932 Rockwall Storage Landscape Conflicts

Jon,

We are unable to issue a Temporary Certificate of Occupancy (TCO) for this project. As noted in previous City comments, trees must be situated outside of all public easements. Although Atmos is a private utility, it was the responsibility of the developer to contact them during the planning process to ensure compliance with their requirements.

Please let me know if you have any questions.

Thank you,
Bethany Ross
Planner
City of Rockwall
972.772.6488 Office
bross@rockwall.com
City of Rockwall - Planning & Zoning

From: Jon Harris <jharris@advconstruction.net>
Sent: Wednesday, December 18, 2024 2:16 PM
To: Ross, Bethany <bross@rockwall.com>
Cc: Matt Isch <misch@advconstruction.net>
Subject: RE: Com2023-2932 Rockwall Storage Landscape Conflicts

Bethany,
We where hoping to be complete with this project by mid January. Would it be possible to get a temp CO while we are working this out? I have never run into this issue before, needing an encroachment agreement for Atmos to plant plants in their easement

Jon Harris, *Project Manager*
***ADV*ANTAGE** CONSTRUCTION, LLC
2221 Lakeside Blvd, Suite 1260
Richardson,Texas 75082
Office: (214) 308-5225 **Ext 9102#**
Mobile: (214) 868-3389

From: Ross, Bethany <bross@rockwall.com>
Sent: Wednesday, December 18, 2024 12:57 PM
To: Jon Harris <jharris@advconstruction.net>
Subject: RE: Com2023-2932 Rockwall Storage Landscape Conflicts

Hi Jon,

For the buffer along 276, you will need to come in for an amended site plan as Planning and Zoning will need to approve a variance for the landscape buffer. Our next submittal date is January 17. The trees within the detention area can be moved to the other side of the detention area. All of these changes will need to go through our amended site plan process as the engineering department will need to approve the new tree locations.

Thank you,
Bethany Ross
Planner
City of Rockwall
972.772.6488 Office
bross@rockwall.com
City of Rockwall - Planning & Zoning

From: Jon Harris <jharris@advconstruction.net>
Sent: Wednesday, December 18, 2024 10:30 AM
To: Lee, Henry <HLee@rockwall.com>
Subject: Com2023-2932 Rockwall Storage Landscape Conflicts

Henry,
We have an issue with some of the landscaping inside the Atmos utility easement. I am being told that the none of the plants along their easements are approved plants that can be planted in their Easement. Also Atmos is requesting an encroachment agreement for us to even plant approved plants within their easement. Can you give me a call to discuss this?

I have highlighted the areas with plants within their easement

Office: (214) 308-5225 Ext 9102#
Mobile: (214) 868-3389

Thanks,

Jon Harris, *Project Manager*
ADVANTAGE CONSTRUCTION, LLC
2221 Lakeside Blvd, Suite 1260
Richardson,Texas 75082
Office: (214) 308-5225 **Ext 9102#**
Mobile: (214) 868-3389

CAUTION: This email originated from outside of the organization. Do not click links or open attachments unless you recognize the sender and know the content is safe.

CAUTION: This email originated from outside of the organization. Do not click links or open attachments unless you recognize the sender and know the content is safe.

CAUTION: This email originated from outside of the organization. Do not click links or open attachments unless you recognize the sender and know the content is safe.

CAUTION: This email originated from outside of the organization. Do not click links or open attachments unless you recognize the sender and know the content is safe.

CAUTION: This email originated from outside of the organization. Do not click links or open attachments unless you recognize the sender and know the content is safe.

CAUTION: This email originated from outside of the organization. Do not click links or open attachments unless you recognize the sender and know the content is safe.

CAUTION: This email originated from outside of the organization. Do not click links or open attachments unless you recognize the sender and know the content is safe.

CAUTION: This email originated from outside of the organization. Do not click links or open attachments unless you recognize the sender and know the content is safe.

CAUTION: This email originated from outside of the organization. Do not click links or open attachments unless you recognize the sender and know the content is safe.

CAUTION: This email originated from outside of the organization. Do not click links or open attachments unless you recognize the sender and know the content is safe.

CAUTION: This email originated from outside of the organization. Do not click links or open attachments unless you recognize the sender and know the content is safe.

CAUTION: This email originated from outside of the organization. Do not click links or open attachments unless you recognize the sender and know the content is safe.

CAUTION: This email originated from outside of the organization. Do not click links or open attachments unless you recognize the sender and know the content is safe.

CAUTION: This email originated from outside of the organization. Do not click links or open attachments unless you recognize the sender and know the content is safe.

CAUTION: This email originated from outside of the organization. Do not click links or open attachments unless you recognize the sender and know the content is safe.

CAUTION: This email originated from outside of the organization. Do not click links or open attachments unless you recognize the sender and know the content is safe.

CAUTION: This email originated from outside of the organization. Do not click links or open attachments unless you recognize the sender and know the content is safe.

CAUTION: This email originated from outside of the organization. Do not click links or open attachments unless you recognize the sender and know the content is safe.

CAUTION: This email originated from outside of the organization. Do not click links or open attachments unless you recognize the sender and know the content is safe.

CAUTION: This email originated from outside of the organization. Do not click links or open attachments unless you recognize the sender and know the content is safe.

CAUTION: This email originated from outside of the organization. Do not click links or open attachments unless you recognize the sender and know the content is safe.

CAUTION: This email originated from outside of the organization. Do not click links or open attachments unless you recognize the sender and know the content is safe.

CAUTION: This email originated from outside of the organization. Do not click links or open attachments unless you recognize the sender and know the content is safe.

CAUTION: This email originated from outside of the organization. Do not click links or open attachments unless you recognize the sender and know the content is safe.

CAUTION: This email originated from outside of the organization. Do not click links or open attachments unless you recognize the sender and know the content is safe.

CAUTION: This email originated from outside of the organization. Do not click links or open attachments unless you recognize the sender and know the content is safe.